# Grill cabin 9.2 with extension x 2

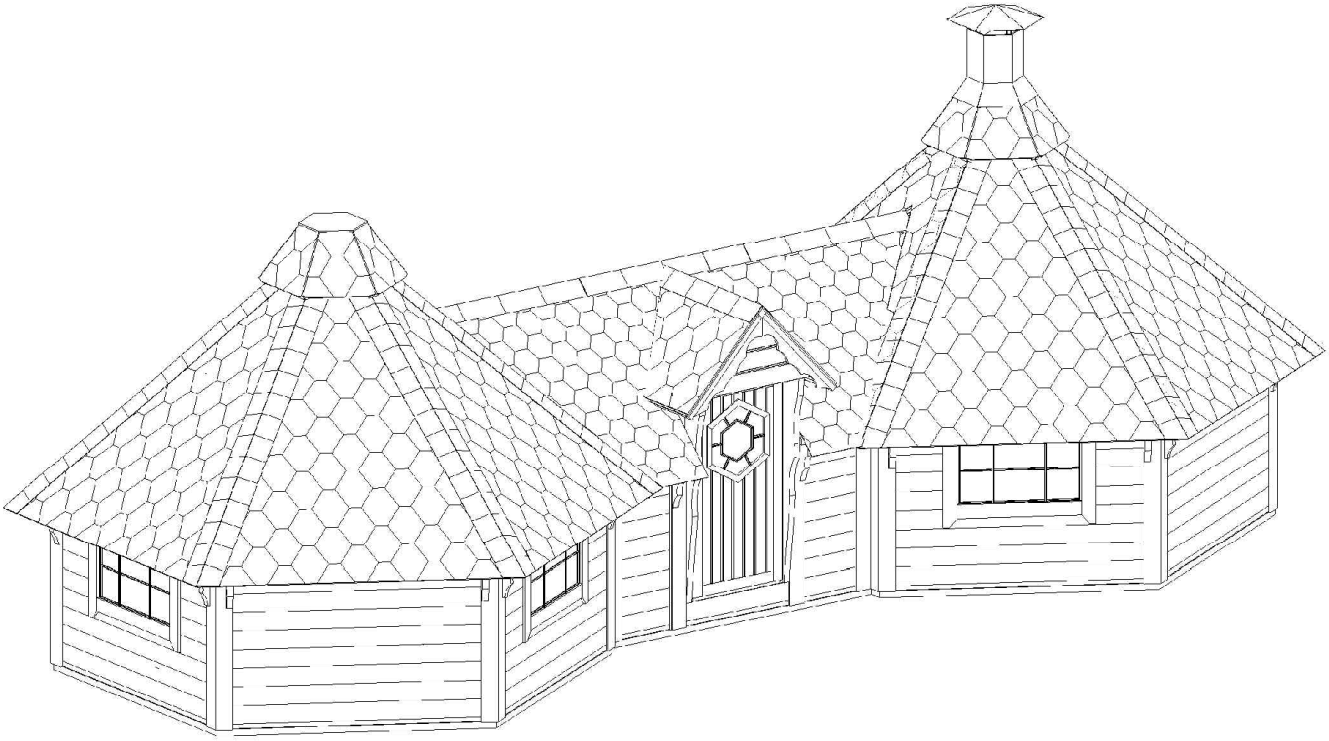

# Grill cabin 9.2 with extension x 2

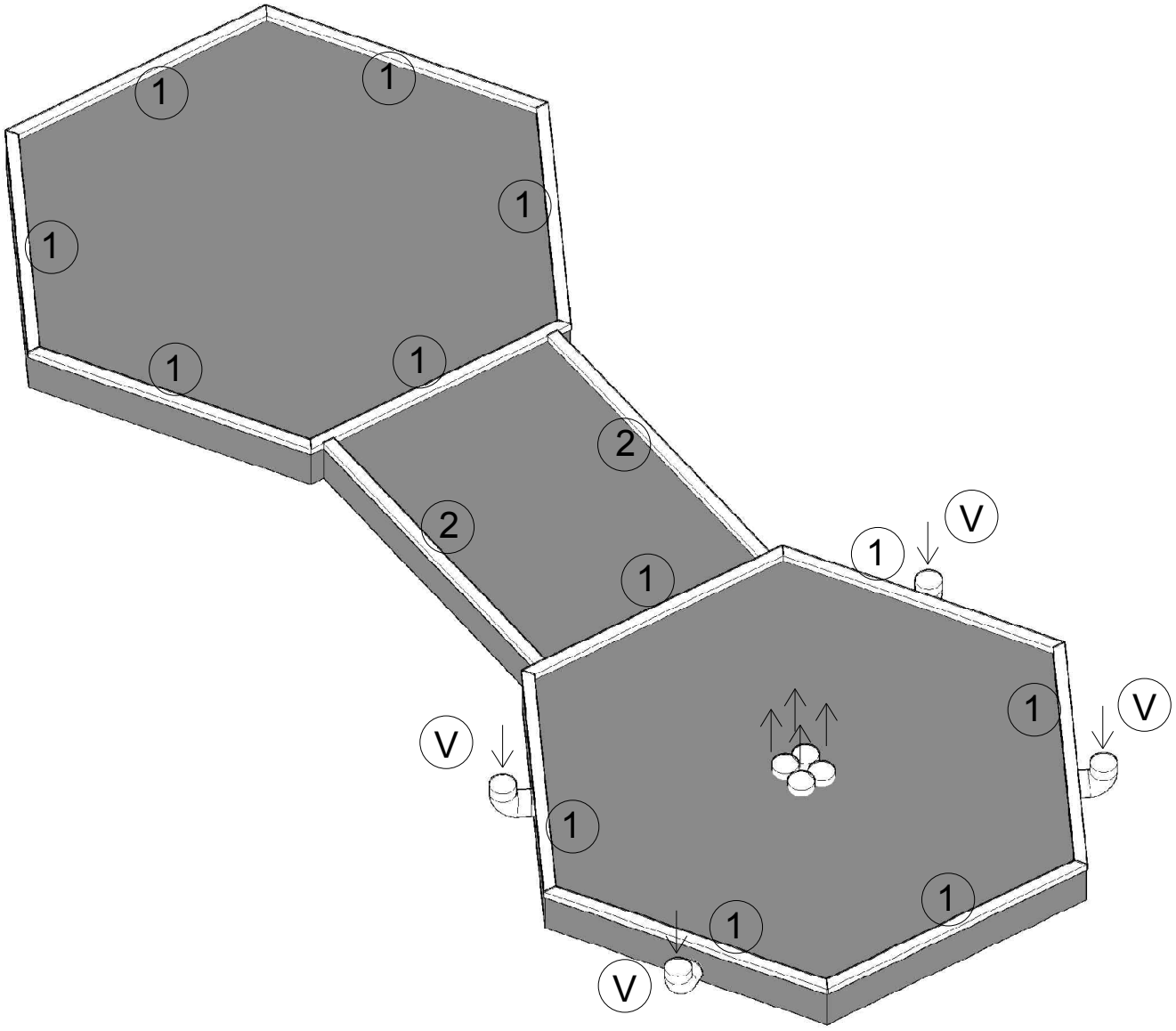


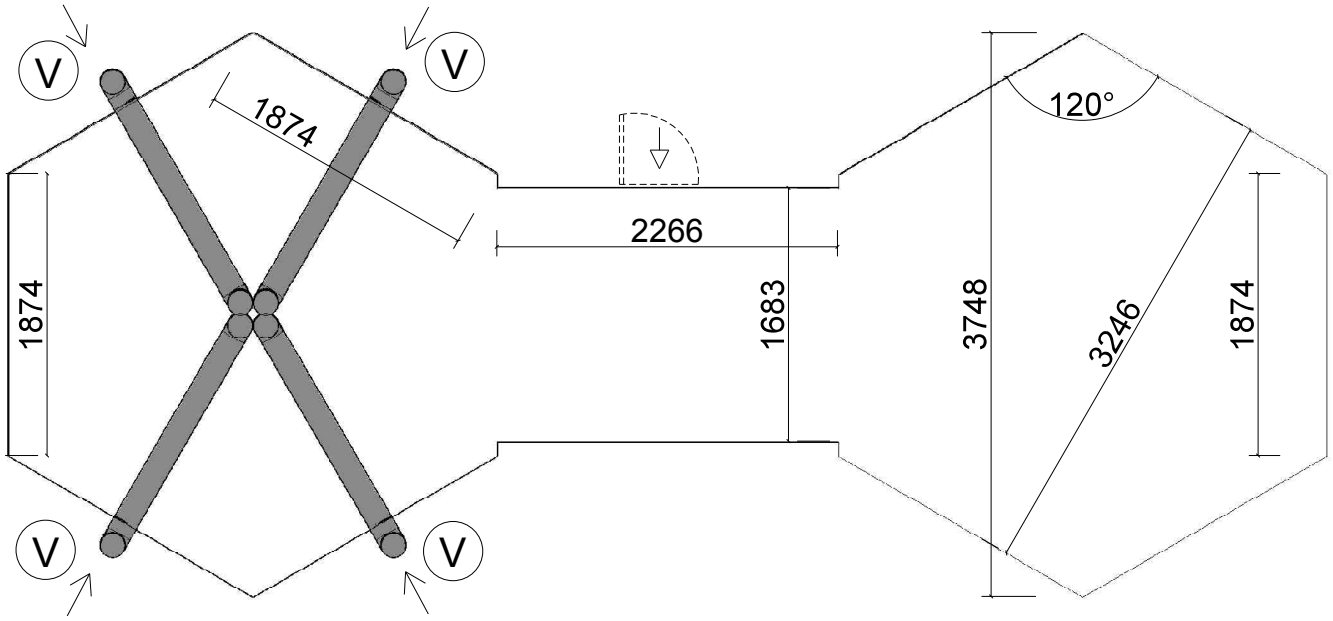

## 1. GRILL CABIN 9.2 with extension x 2

| No. | x z y Detail | Pcs | Dimension ( x, y, z ) mm | |
|---|---|---|---|---|
| 1 | | 12 | 70 x 1880 x 45 | |
| 2 | | 2 | 70 x 2256 x 45 | |
| 3 | | 1 | 1155 x 2256 x 45 | |
| 4 | | 1 | 1155 x 2256 x 45 | |
| 5 | | 4 | 1155 x 1880 x 45 | |
| 6 | | 4 | 1155 x 1880 x 45 | |
| 7 | | 2 | 1155 x 1693 x 45 | |
| 8 | | 4 | 139 x 1155 x 45 | |
| 9 | 120° | 8 | 1155 x 195 x 18 | |
| 10 | 120° | 2 | 1155 x 195 x 18 | |
| 11 | 120° | 2 | 1155 x 195 x 18 | |
| 12 | | 3 | 1155 x 195 x 18 | |
| 13 | | 3 | 1155 x 120 x 18 | |
| 14 | | 4 | 1155 x 120 x 18 | |
| 15 | | 10 | 2050 x 195 x 45 | |
| 16 | | 12 | 70 x 240 x 45 | |
| 17 | | 2 | 195 x 200 x 45 | |
| 18 | | 2 | 195 x 200 x 45 | |
| 19 | | 1 | 195 x 1956 x 45 | |
| 20 | | 2 | 195 x 1106 x 45 | |
| | | | | |

## 2. GRILL CABIN 9.2 with extension x 2

| No. | x z y Detail | Pcs | Dimension ( x, y, z ) mm | |
|---|---|---|---|---|
| 21 | 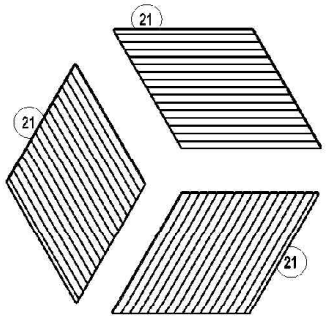 | 3 | 1816 x 2120 x 45 | |
| 21.1<br>21.2 | 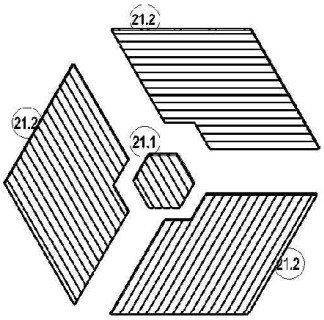 | 1<br>3 | 763 x 881 x 45<br>1816 x 2120 x 45 | |
| 22 | 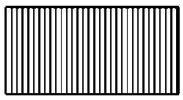 | 1 | 1540 x 2230 x 45 | |
| 23 |  | 10 | 95 x 1840 x 18 | |
| 24 |  | 4 | 95 x 183 x 18 | |
| 25 |  | 2 | 95 x 2346 x 18 | |
| 26 | 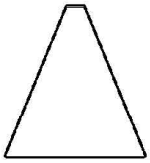 | 10 | 2128 x 2031 x 70 | |
| 27 | 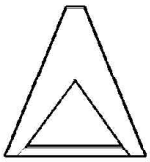 | 2 | 2128 x 2031 x 70 | |
| 28 | 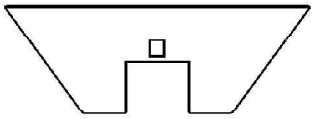 | 1 | 1379 x 3940 x 70 | |
| 29 | | 1 | 1379 x 3940 x 70 | |
| 30 | | 4 | 293 x 713 x 90 | |
| 31 |  | 2 | 70 x 1155 x 18 | |
| 32 |  | 2 | 120 x 1155 x 18 | |
| | | | | |

## 3. GRILL CABIN 9.2 with extension x 2

| No. | x z y Detail | Pcs | Dimension ( x, y, z ) mm | |
|---|---|---|---|---|
| 33 | | 10 | 200 x 2102 x 18 | |
| 34 | | 2 | 200 x 555 x 18 | |
| 35 | | 1 | 200 x 1960 x 18 | |
| 36 | | 6 | 70 x 777 x 18 | |
| 37 | | 6 | 70 x 1155 x 18 | |
| 38 | | 12 | 70 x 2280 x 18 | |
| 39 | | 4 | 70 x 1709 x 18 | |
| 40 | | 2 | 190 x1500 x 45 | |
| 41 | | 1 | 1500 x 780 x 65 | |
| 42 | | 2 | 324 x 305 x 28 | |
| 43 | | 1 | 584 x 848 x 63 | |
| 44 | | 1 | 493 x 820 x 63 | |
| 45 | | 1 | 493 x 820 x 63 | |
| 46 | | 1 | 850 x 1080 x 57 | |
| 47 | | 1 | 890 x 1053 x 57 | |
| 48 | | 2 | 880 x 90 x 18 | |
| 49 | | 2 | 70 x 1570 x 18 | |
| 50 | | 1 | 70 x 736 x 18 | |
| 51 | | 1 | 95 x 850 x 18 | |
| 52 | | 2 | 70 x 541 x 18 | |
| 53 | | 15 | 310 x 310 x 115 | |
| 54 | | 2 | 70 x 1828 x 45 | 9.2 SKS 2 |
| 55 | | 2 | 70 x 2244 x 45 | 9.2 SKS 1 |
| 56 | | 1 | 70 x 1400 x 45 | 9.2 SKS 3 |
| 57 | | 5 | 195 x 1828 x 45 | 9.2 SL 2 |

## 4. GRILL CABIN 9.2 with extension x 2

| No. | x z y Detail | Pcs | Dimension (x, y, z ) mm | |
|---|---|---|---|---|
| 58 | | 5 | 195 x 1591 x 45 | 9.2 SL 3 |
| 59 | | 2 | 195 x 1591 x 45 | 9.2 ASL 1 |
| 60 | | 4 | 330 x 70 x 45 | |
| 61 | | 5 | 390 x 1828 x 50 | |
| 62 | | 1 | 722 x 1000 x 55 | |
| 63 | | 1 | 722 x 1000 x 55 | |

## 5. GRILL CABIN 9.2 with extension x 2

| No. | x z y Detail | Pcs | Dimension ( x, y, z ) mm | |
|---|---|---|---|---|
| A0 | | 72 | 317 x 1000 x 3 | |
| A1 | | 4<br>4 | 100 x 2000 x 3<br>100 x 1200 x 3 | |
| A2 | | 230 | 335 x 250 x 3 | |
| A3 | | 175 | 5 x 100 | |
| A4 | | 49 | 6 x 80 | |
| A5 | | 356 | 4 x 70 | |
| A6 | | 423 | 3.5 x 45 | |
| A7 | | 40 | 3 x 30 | |
| A10 | | 2 p | 2.5 x 20 | |
| A11 | | 10 | — | |
| A12 | | 1 | — | |
| | | | | |
| | | | | |
| | | | | |
| | | | | |
| | | | | |
| | | | | |
| | | | | |
| | | | | |
| | | | | |
| | | | | |
| | | | | |
| | | | | |

# 1. Grill cabin 9.2 with extension x 2

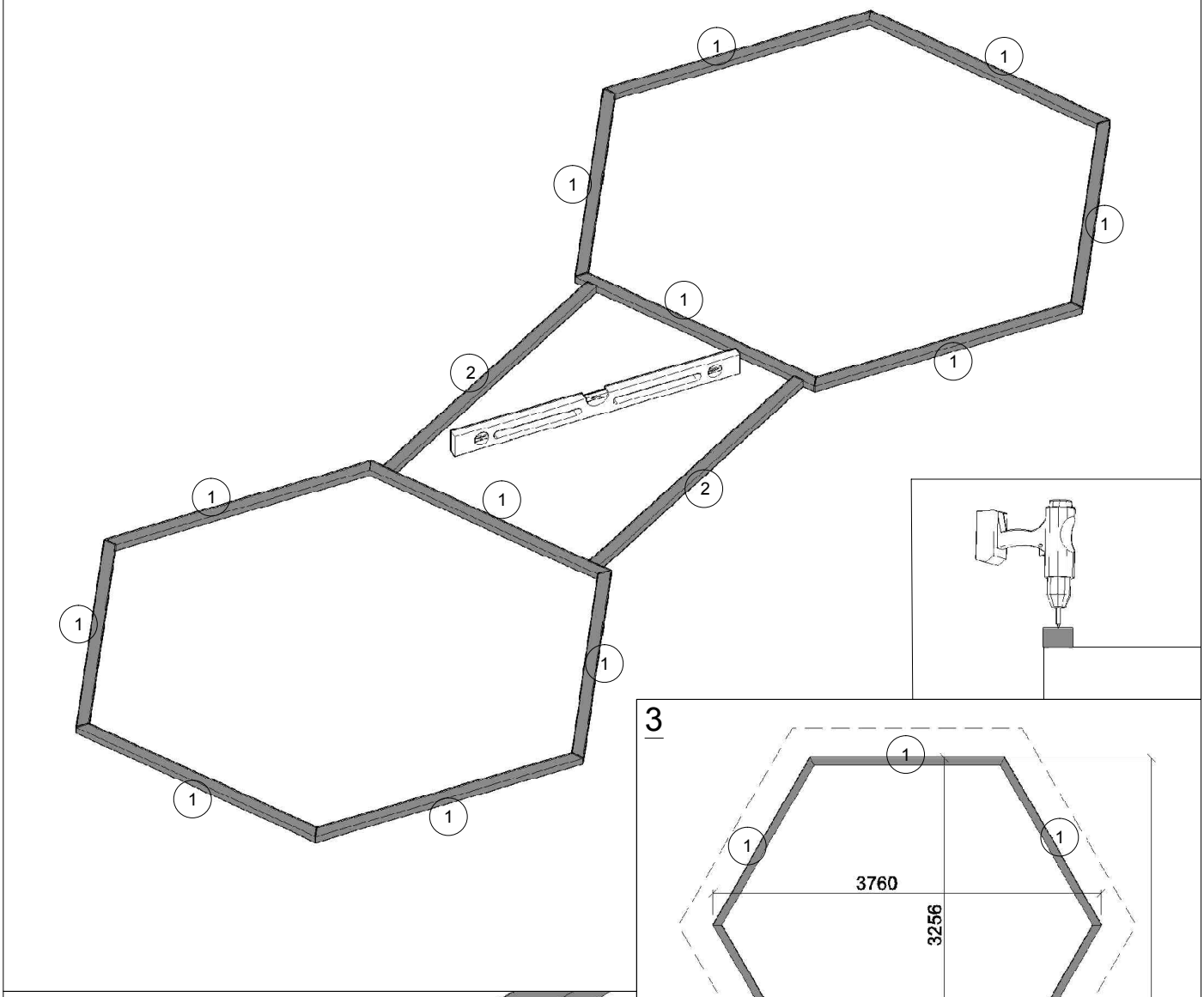


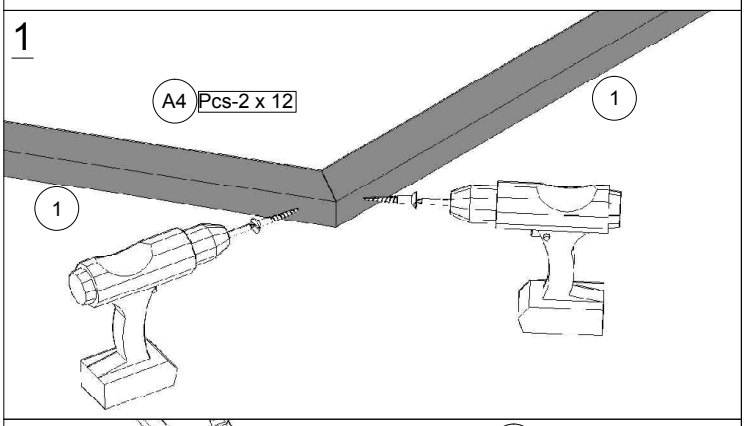


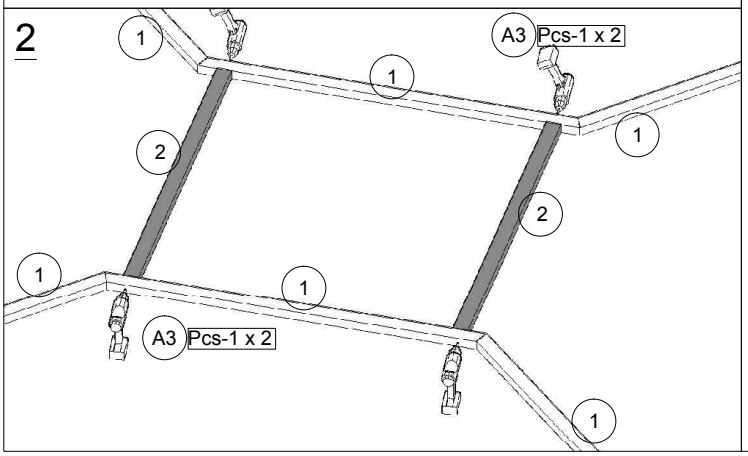


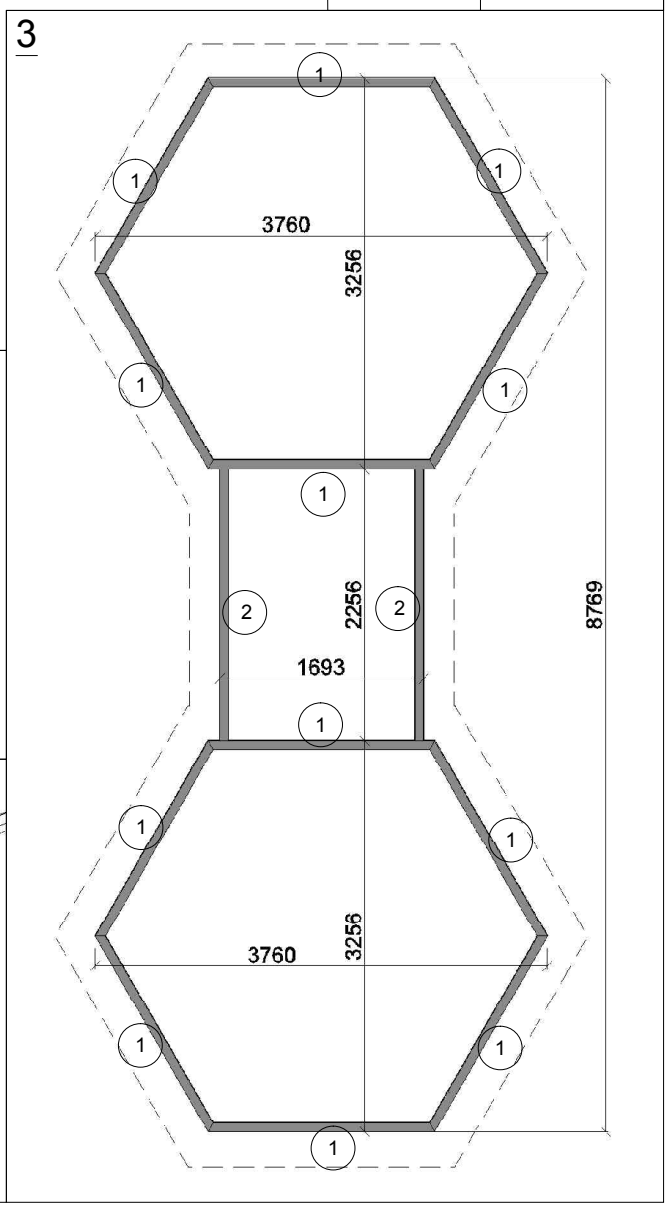

# 2. Grill cabin 9.2 with extension x 2

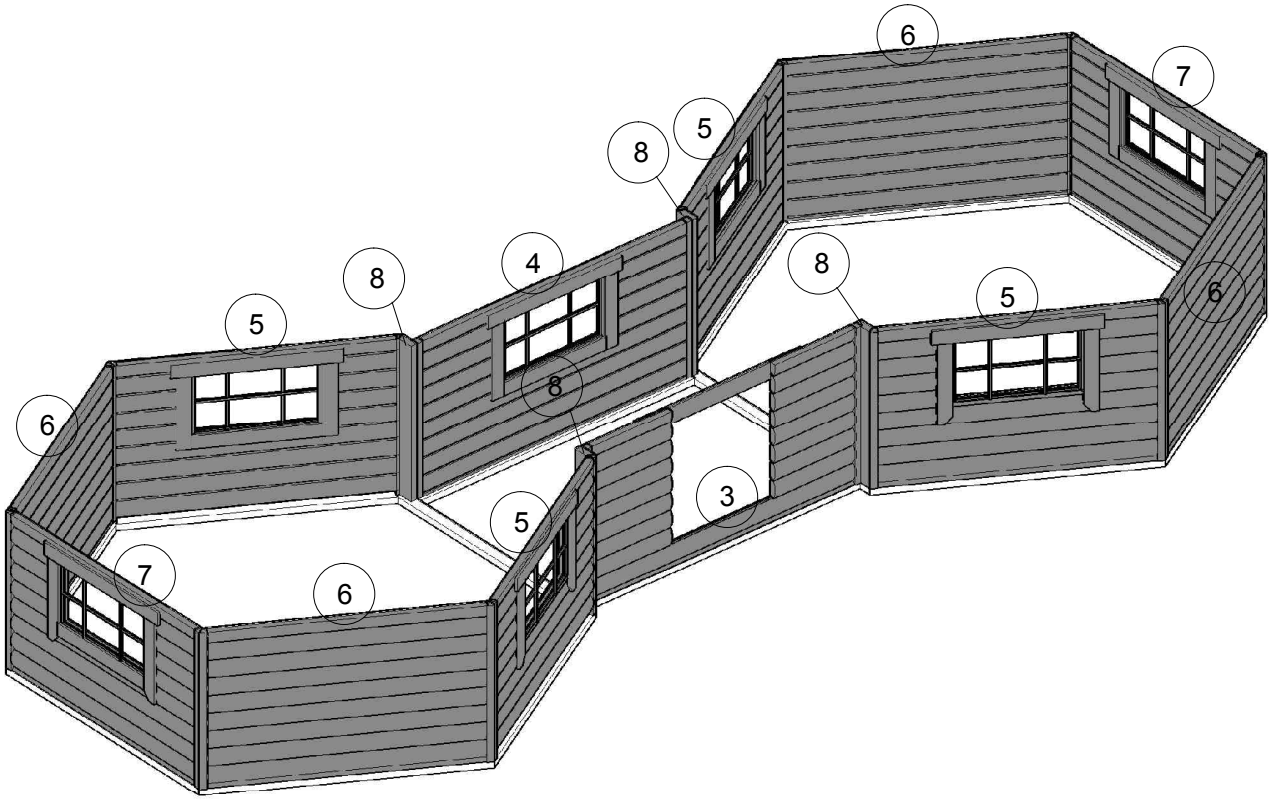


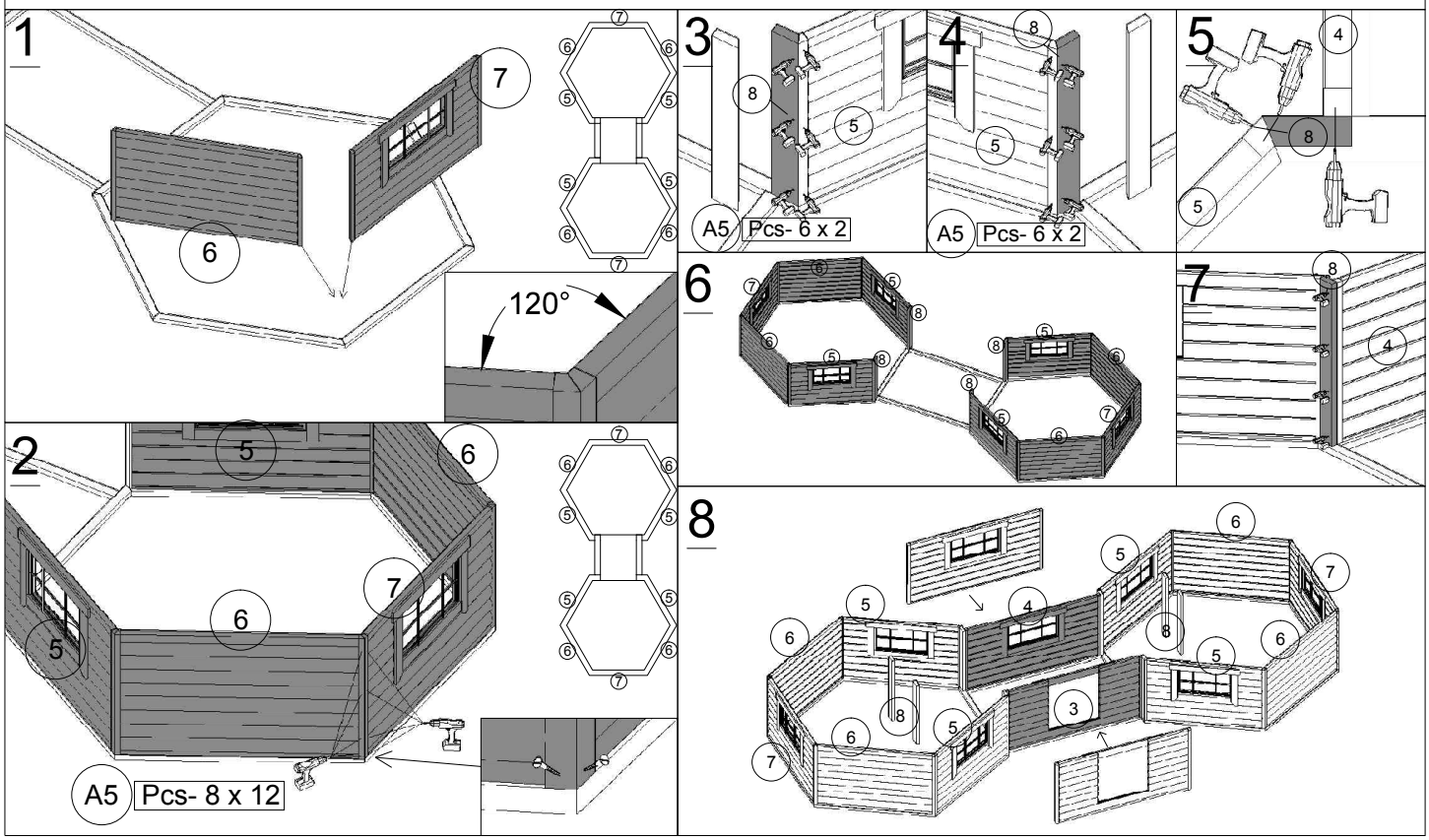

# 3. Grill cabin 9.2 with extension x 2

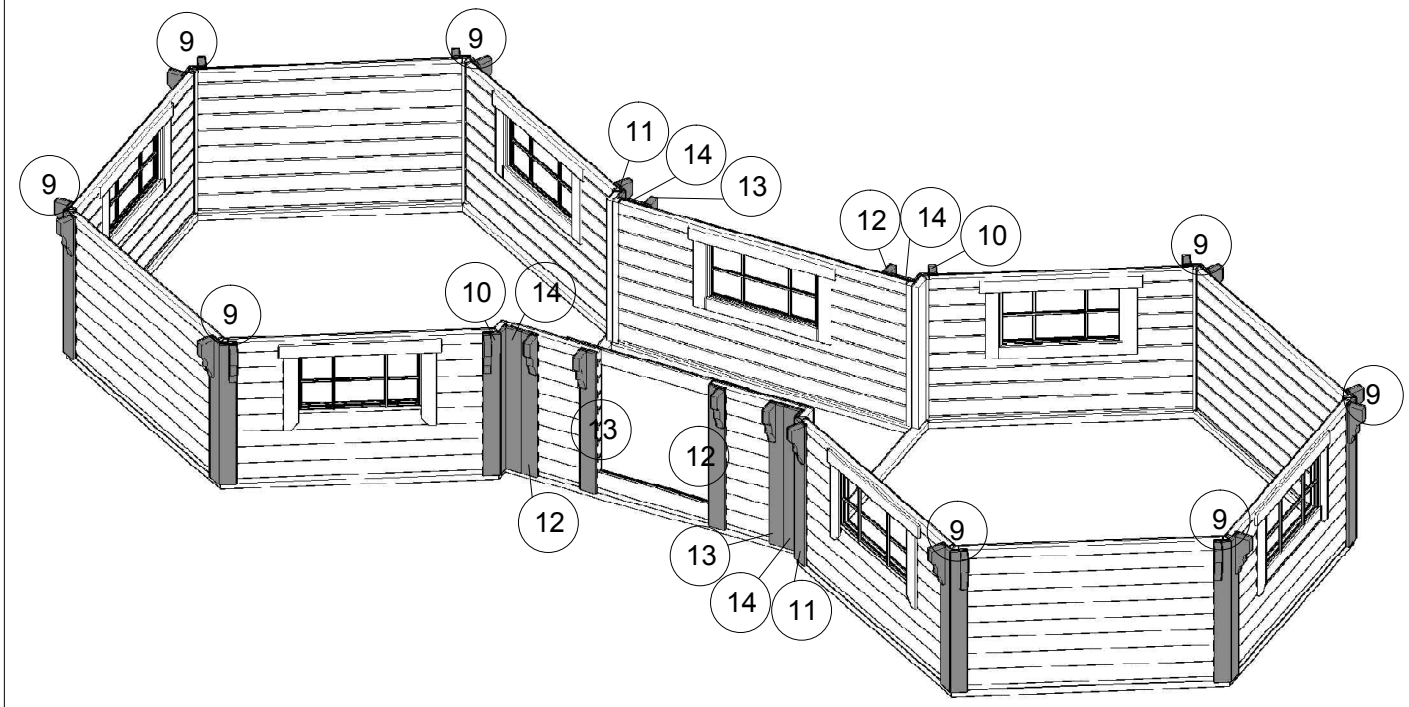


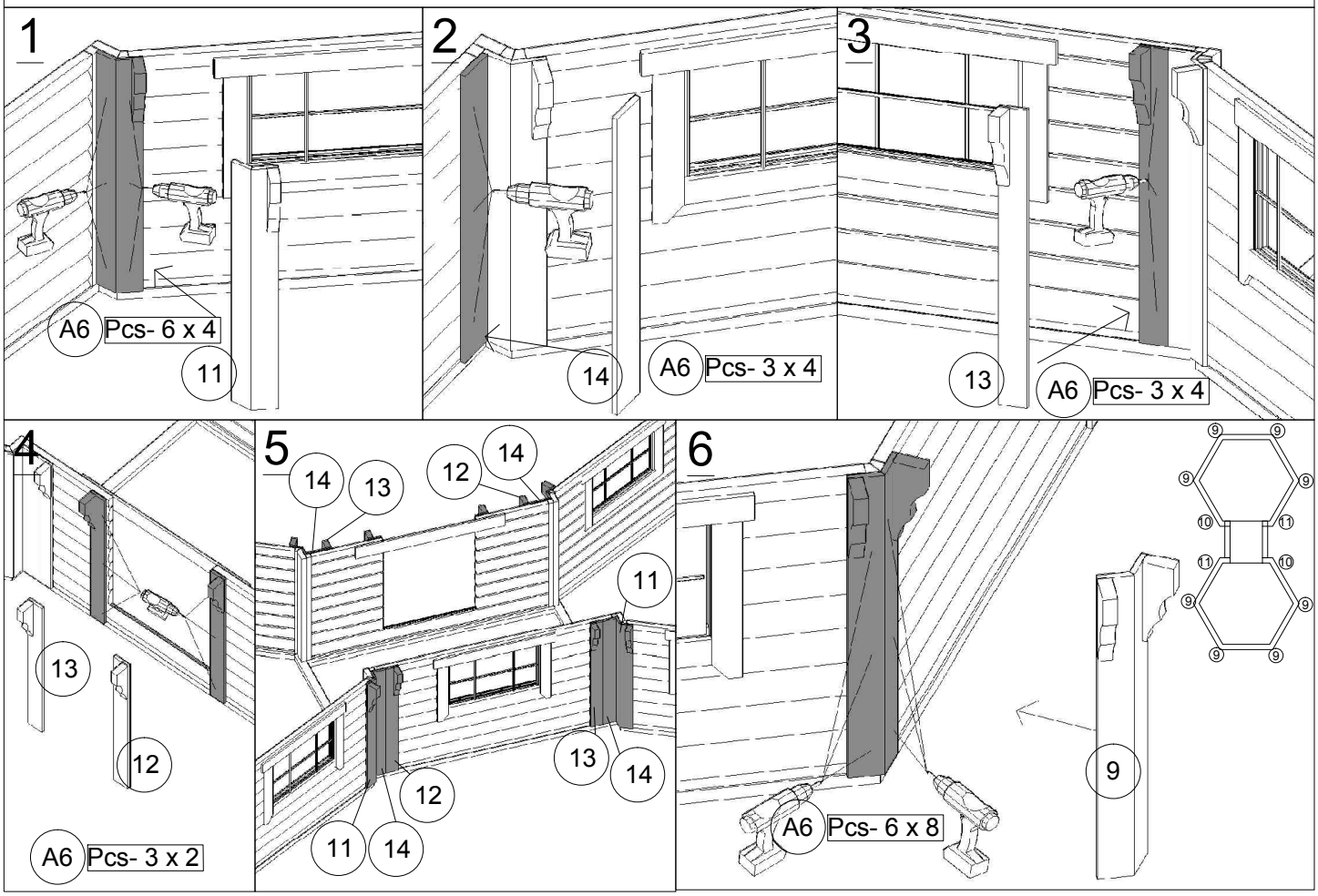

# 4. Grill cabin 9.2 with extension x 2

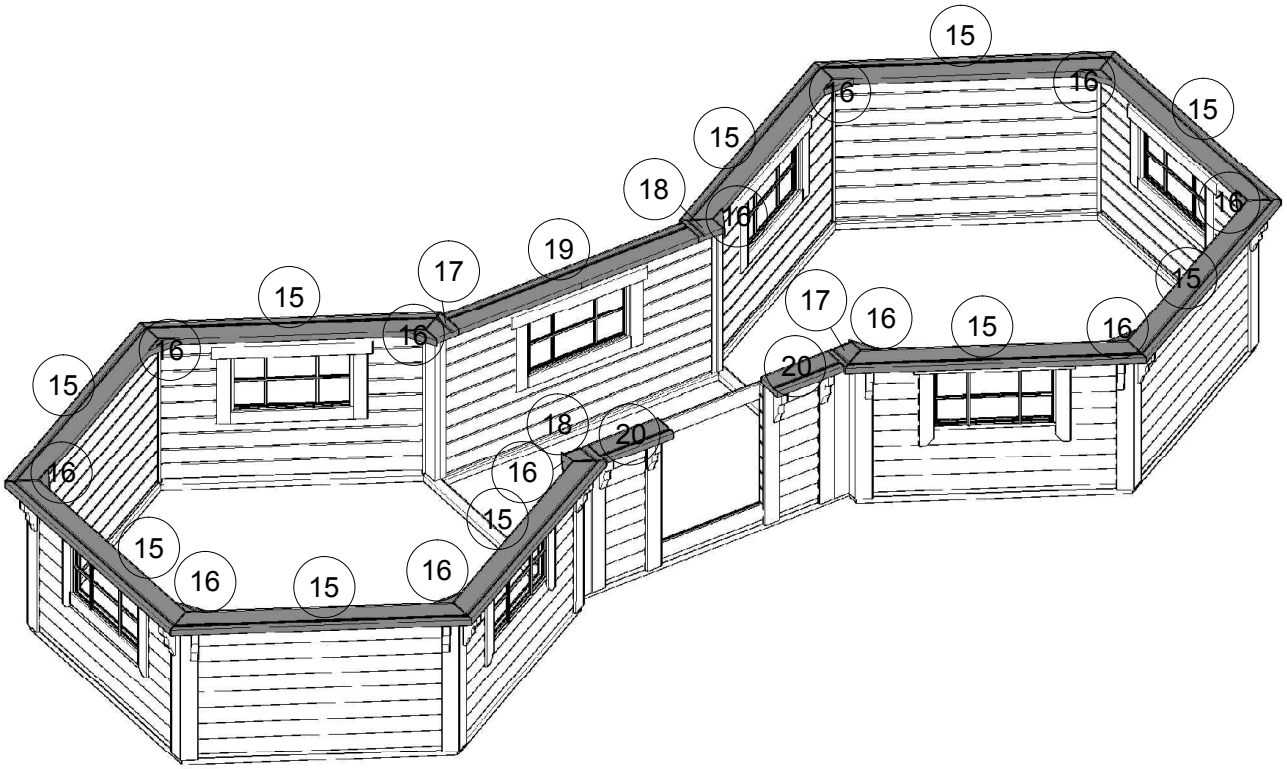


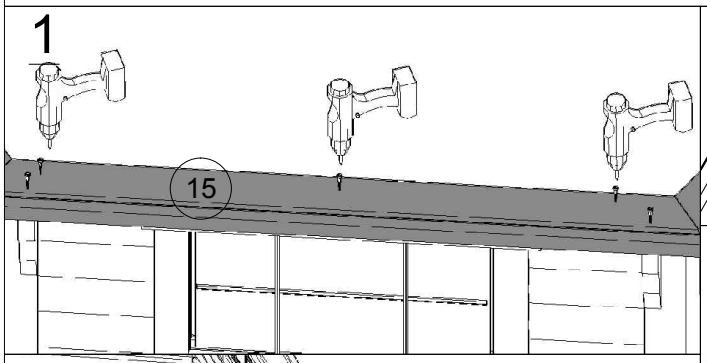


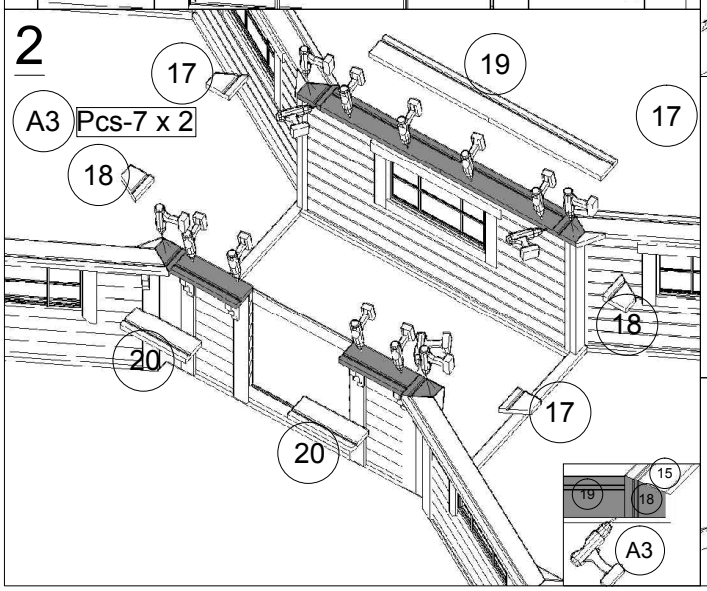


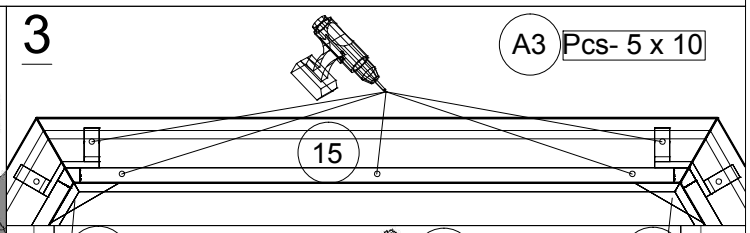


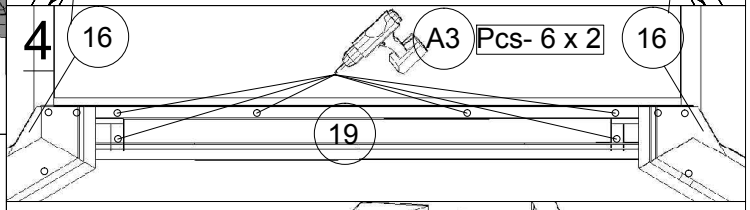


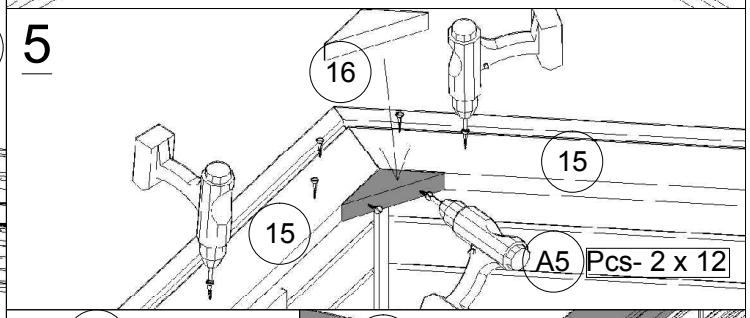


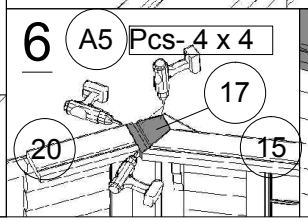


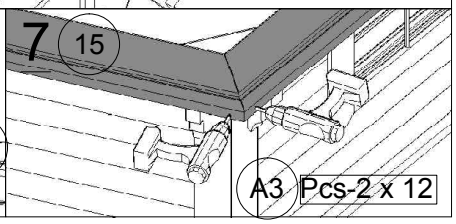

# 5. Grill cabin 9.2 with extension x 2

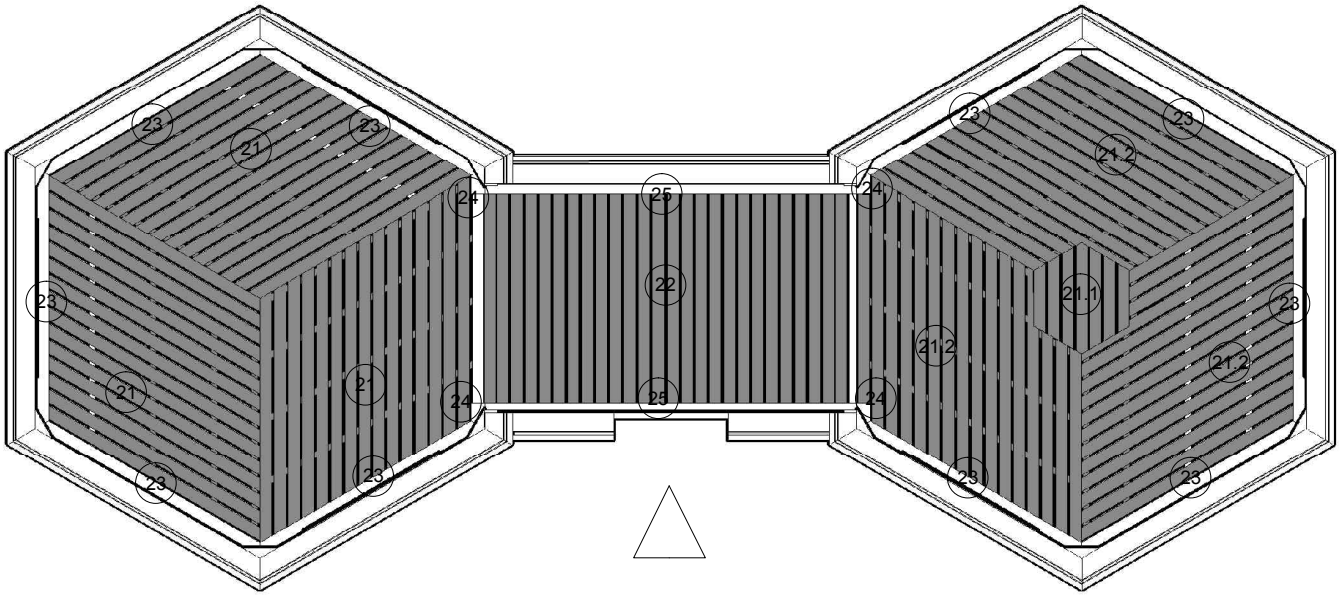


1

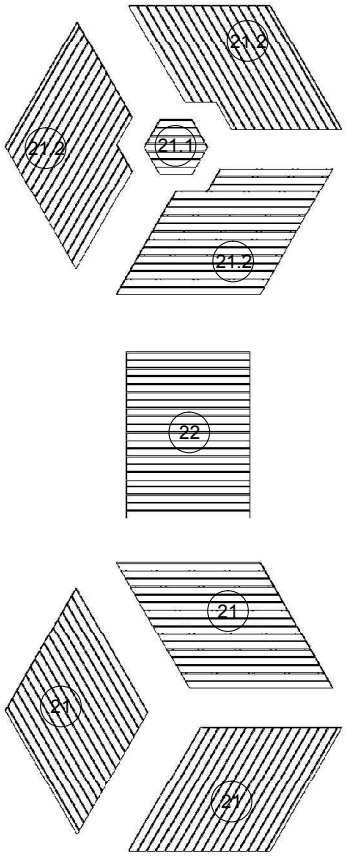


2

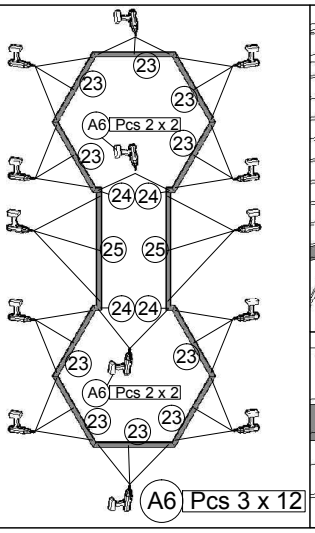


3

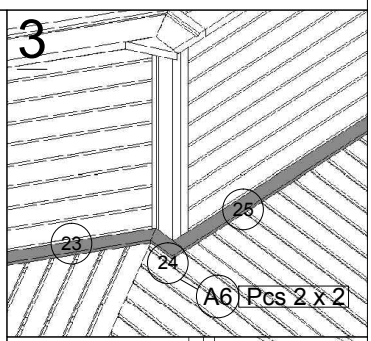


4

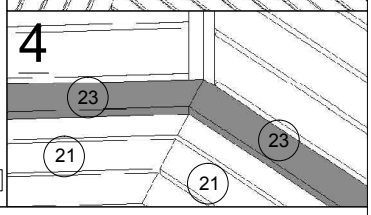


5

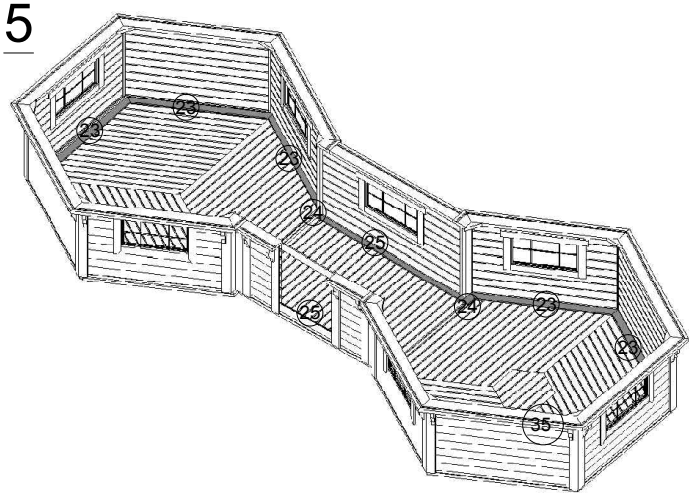

# 6. Grill cabin 9.2 with extension x 2

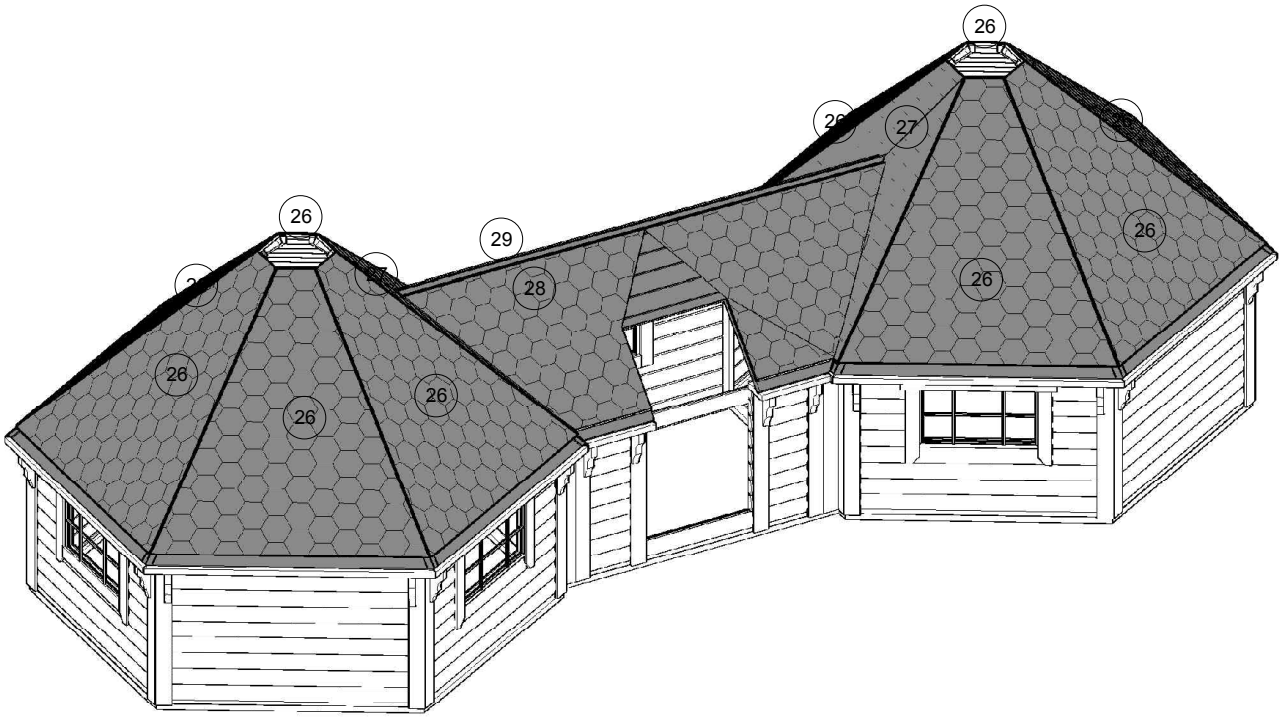


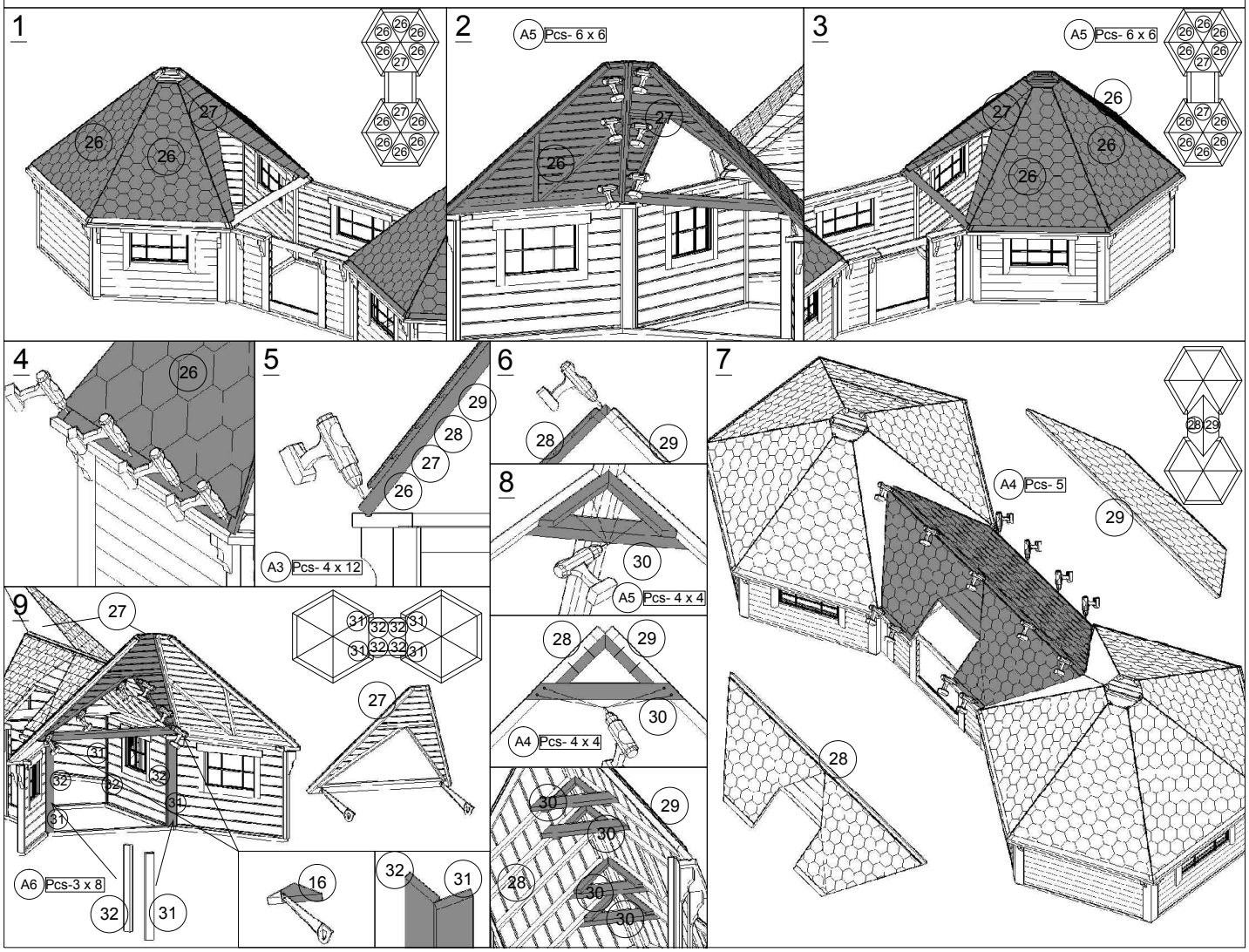

# 7. Grill cabin 9.2 with extension x 2

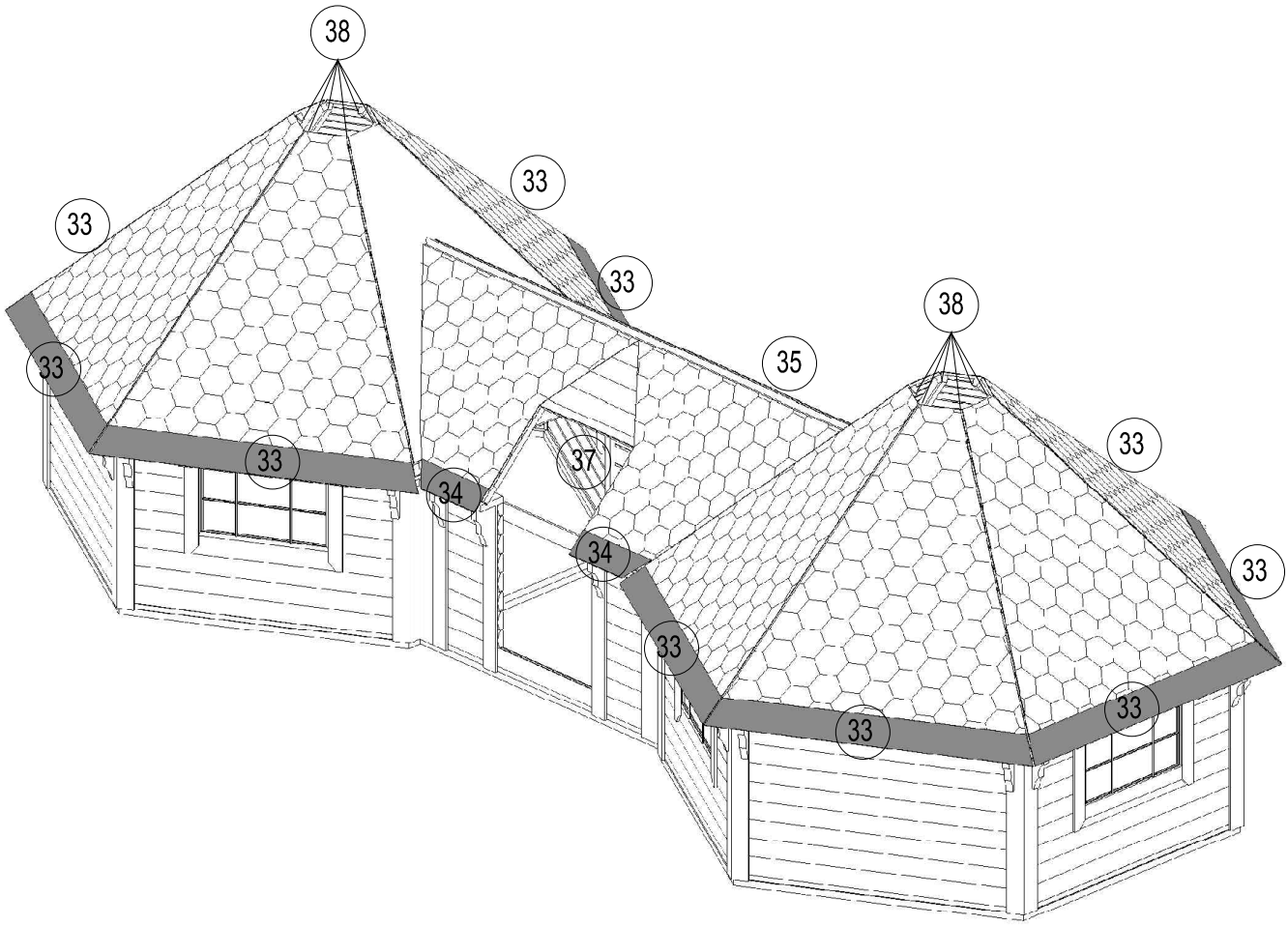


1

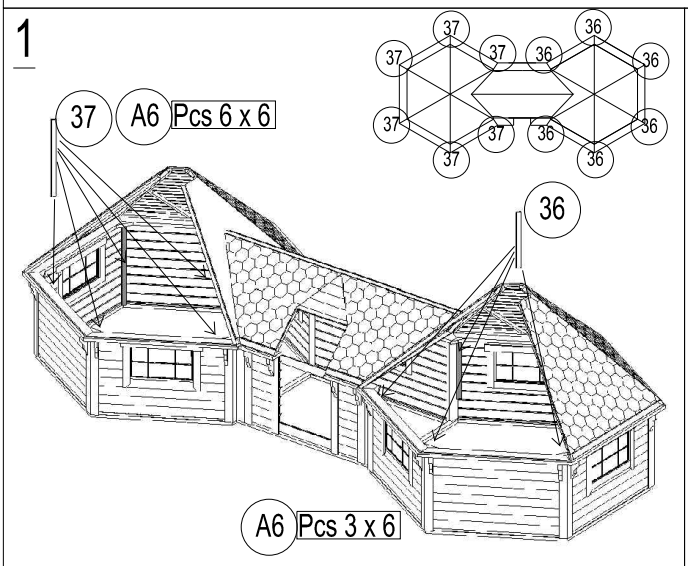


3

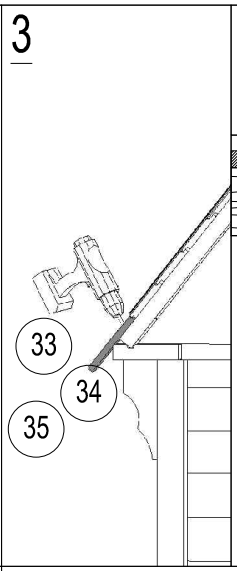


5

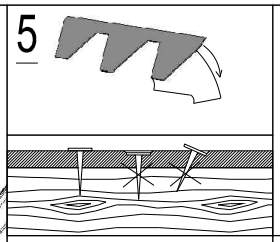

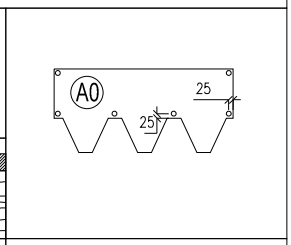


6

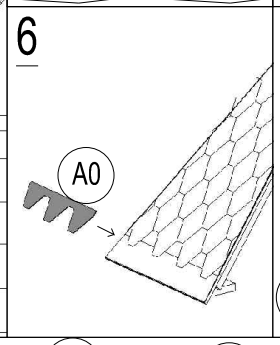


7

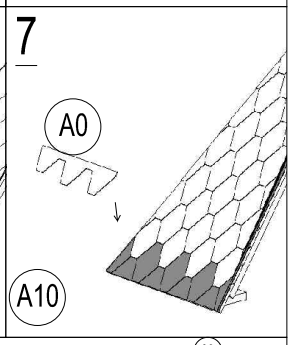


2

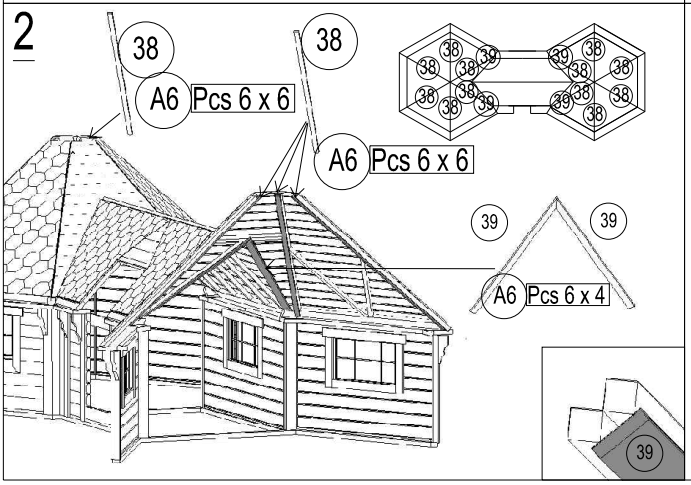


4

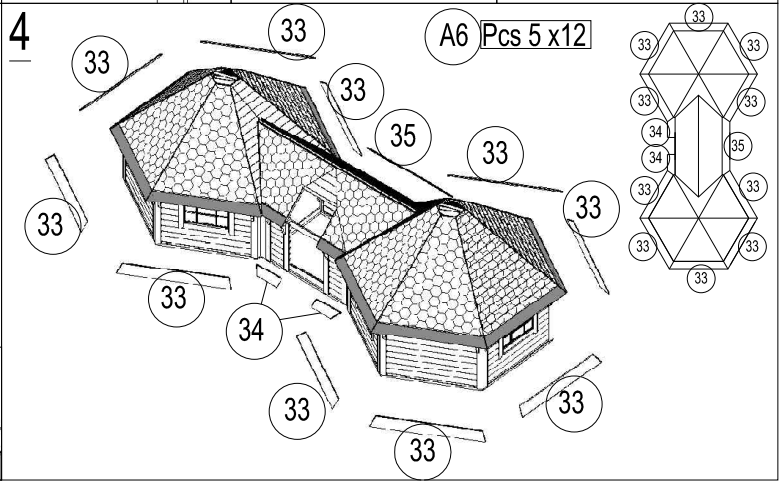

# 8. Grill cabin 9.2 with extension x 2

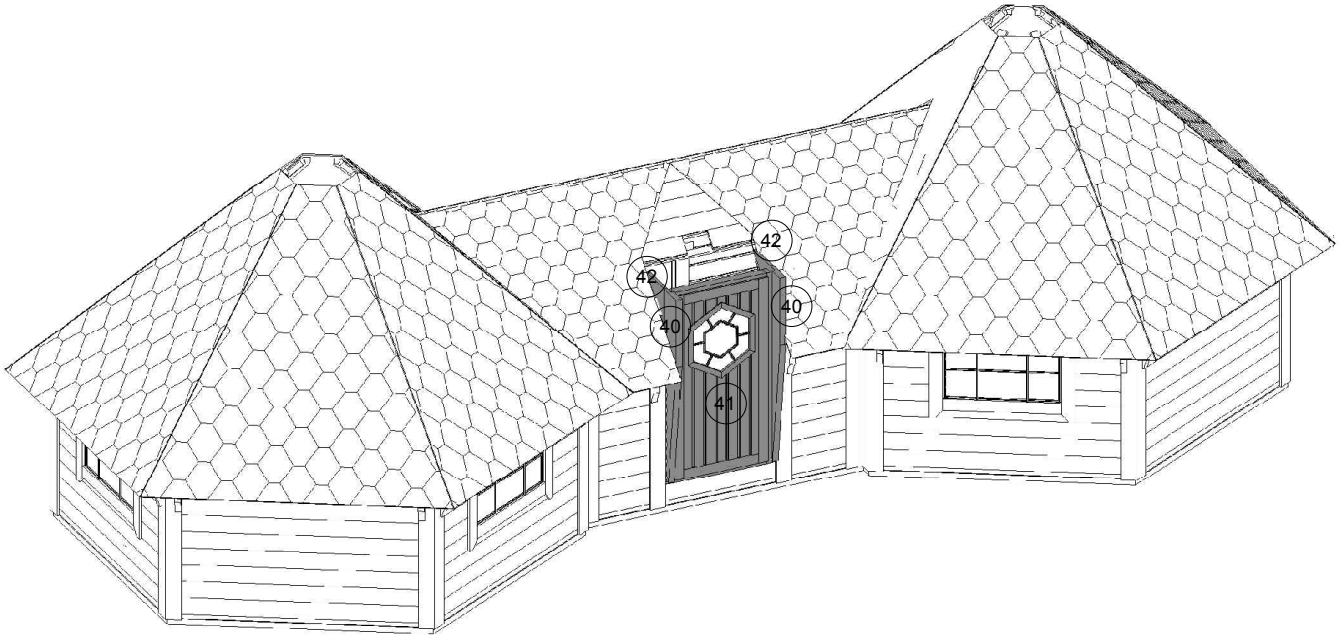


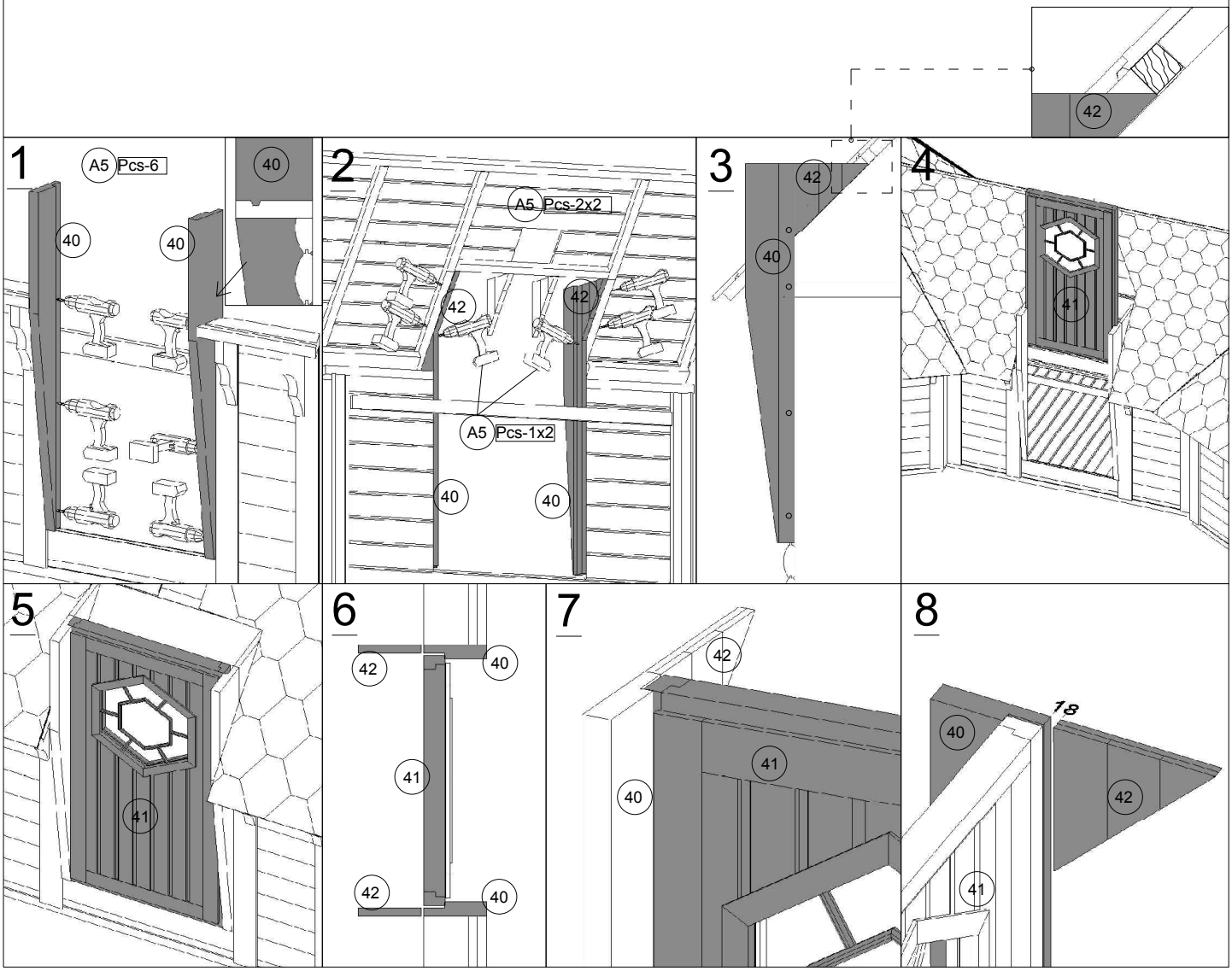

# 9. Grill cabin 9.2 with extension x 2

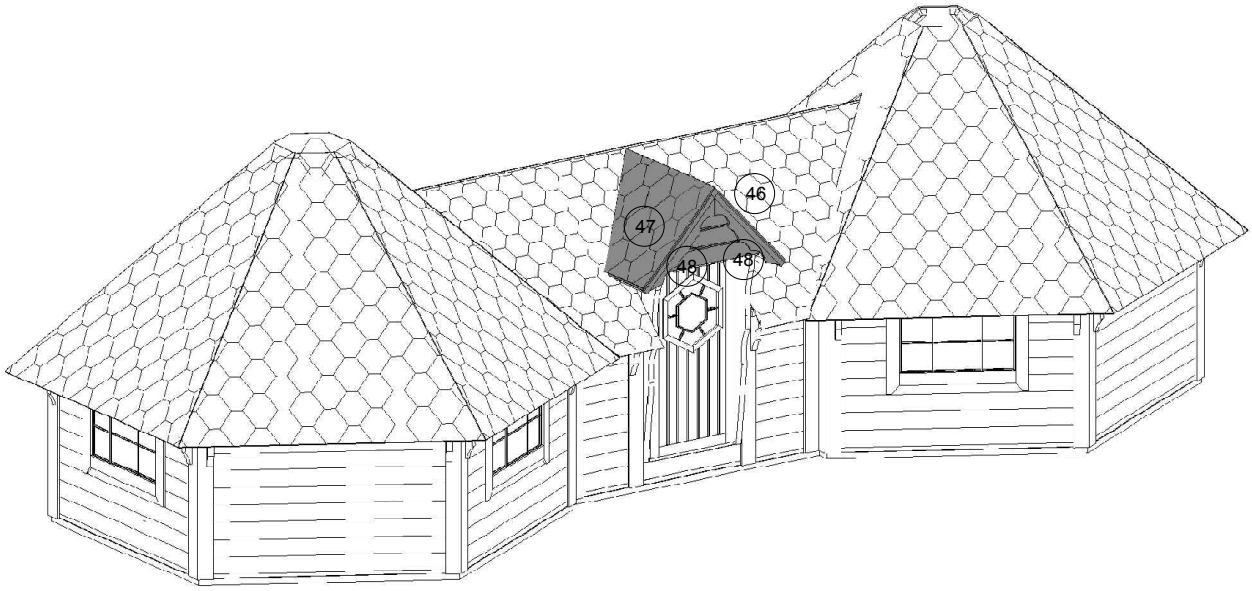


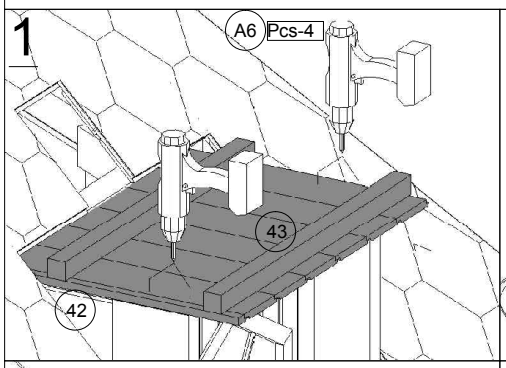


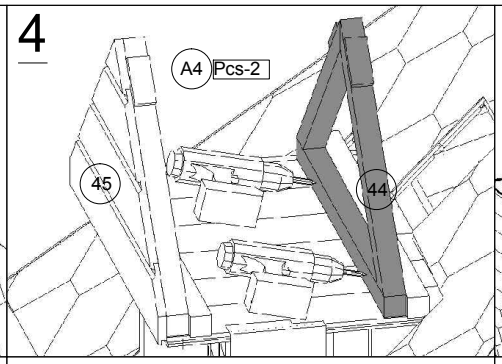


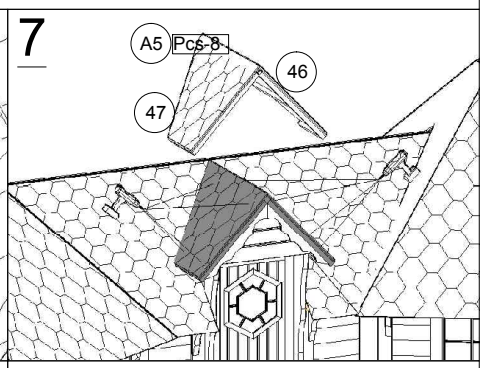


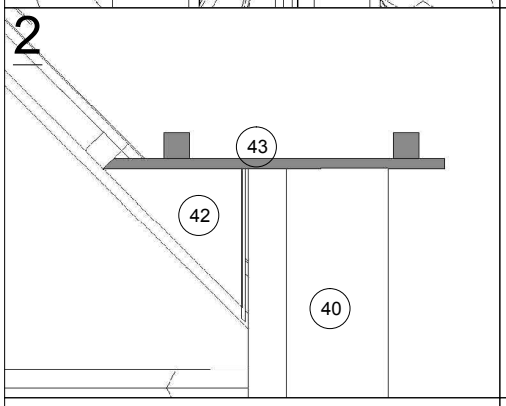


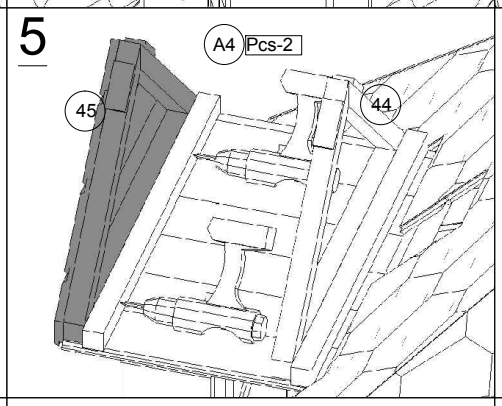


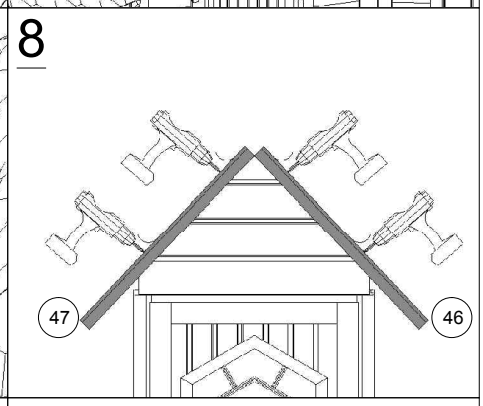


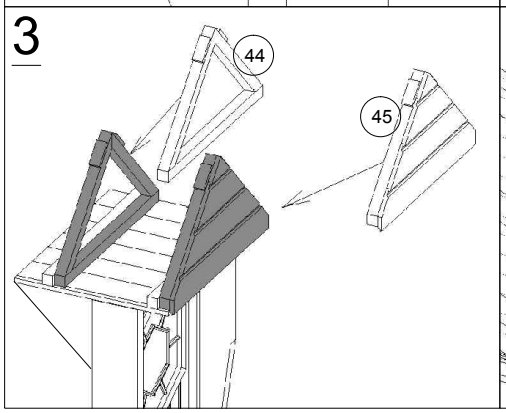


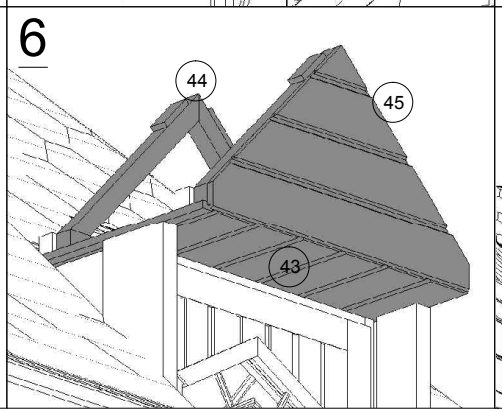


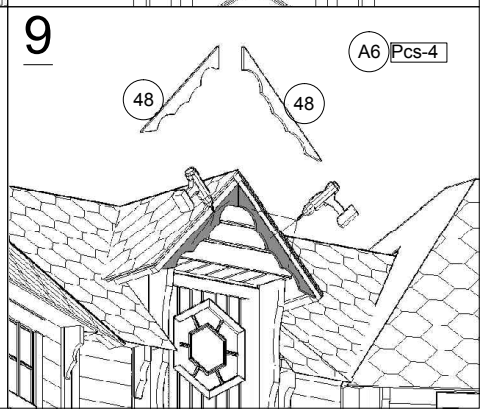

# 10. Grill cabin 9.2 with extension x 2

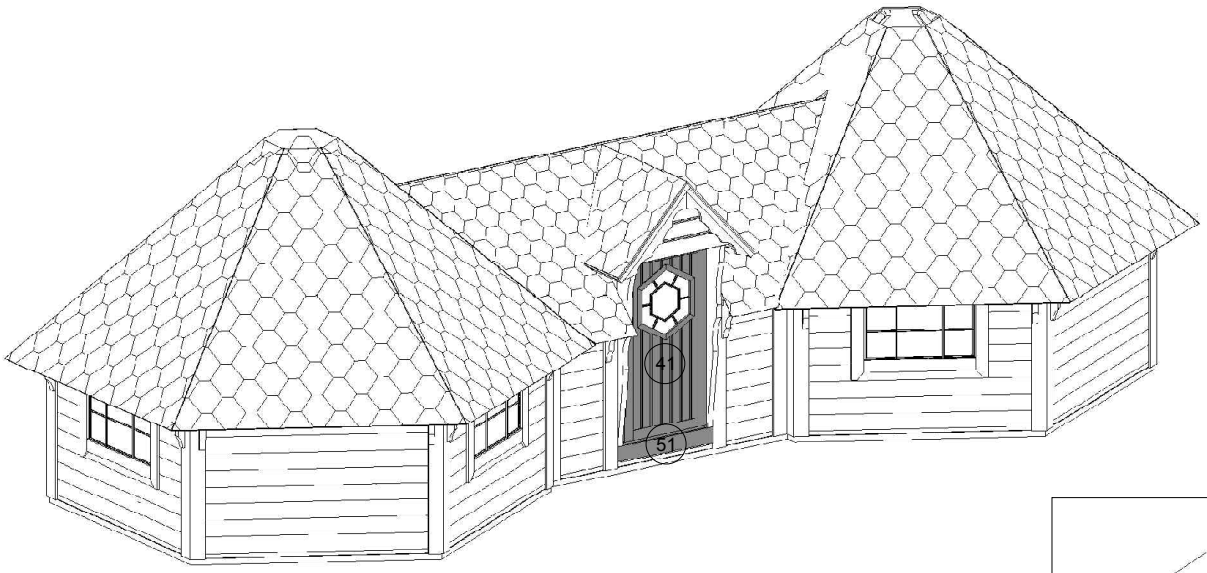


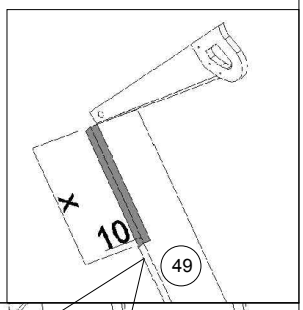


1

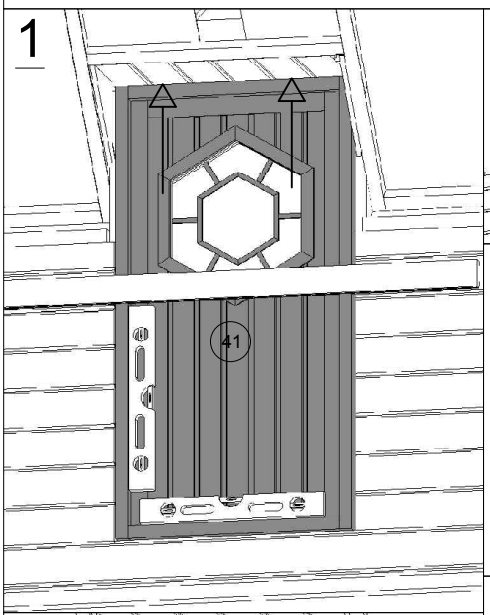


2

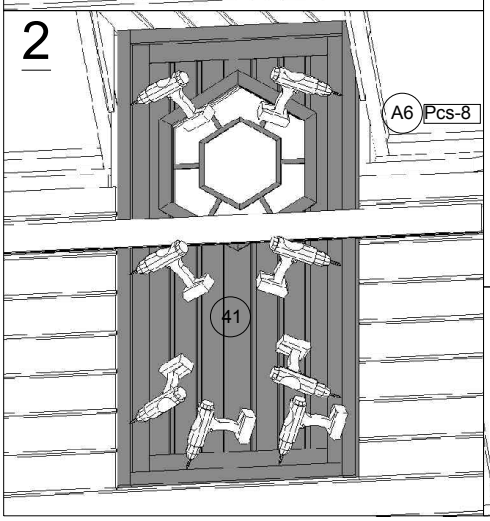


3

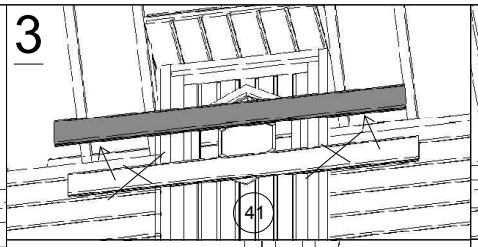


4

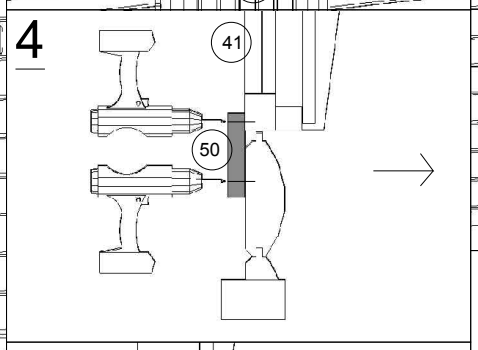


5

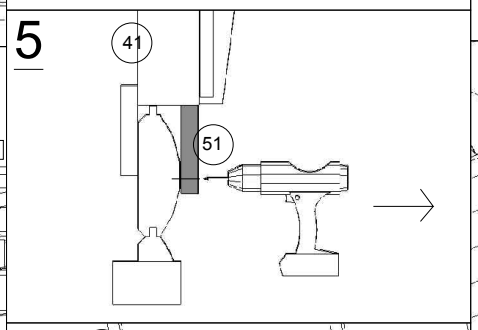


6

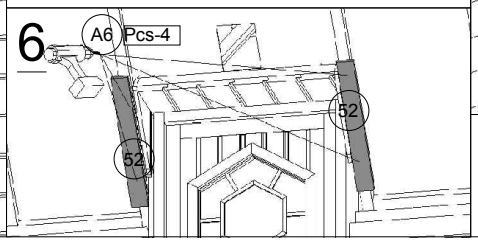


7

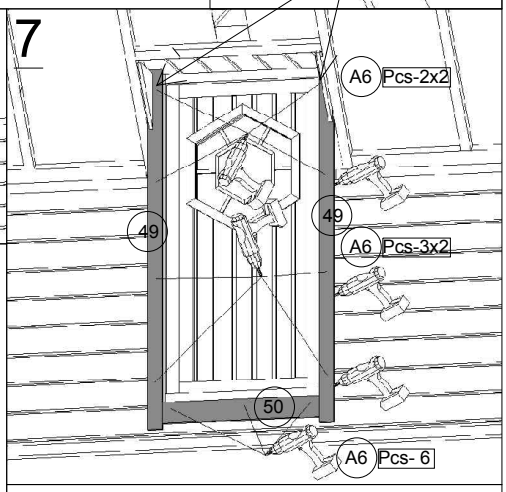


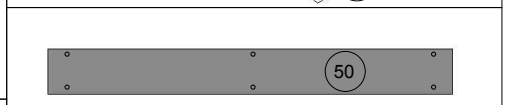


8

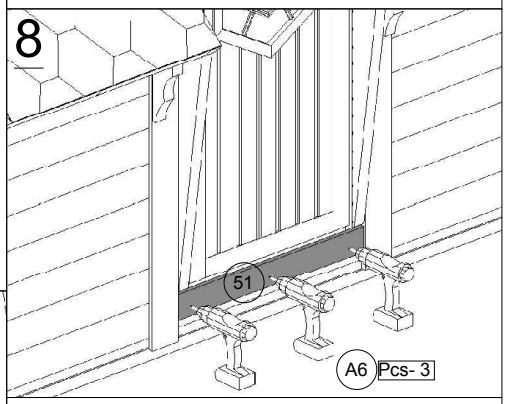


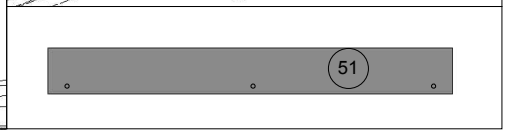

# 11. Grill cabin 9.2 with extension x 2

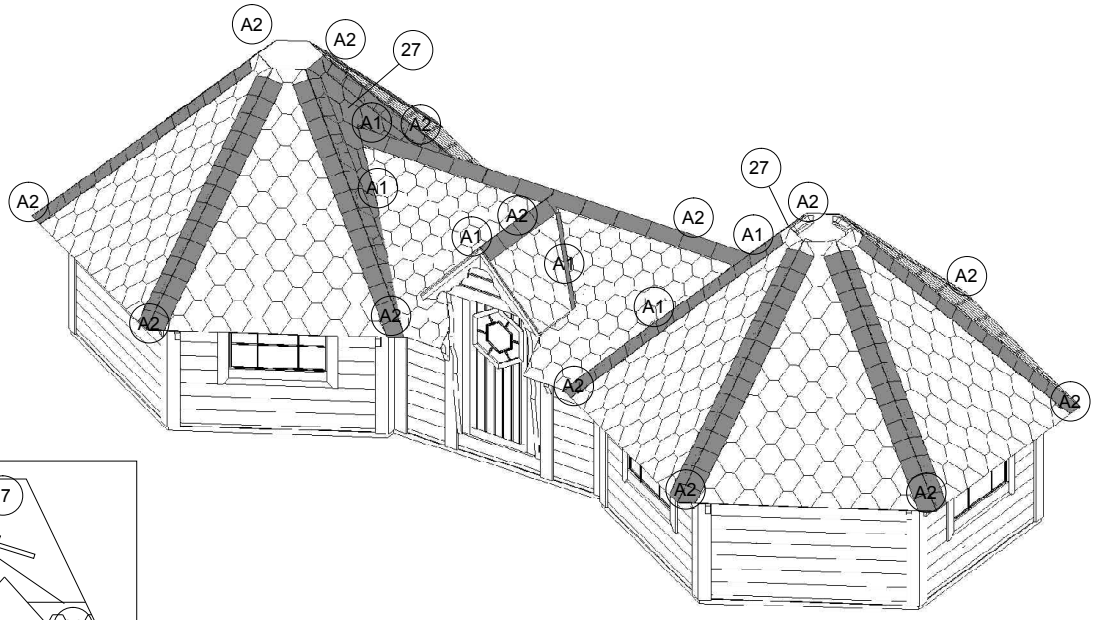


1

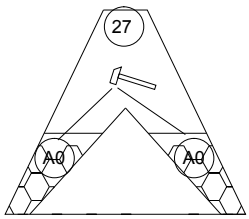


2

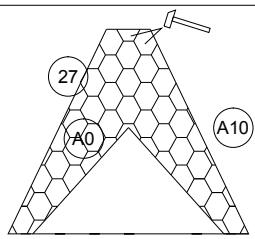


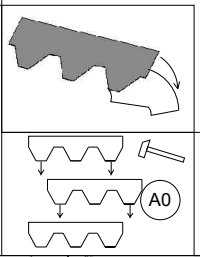


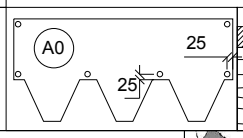


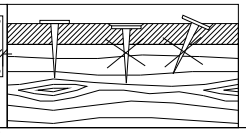

3

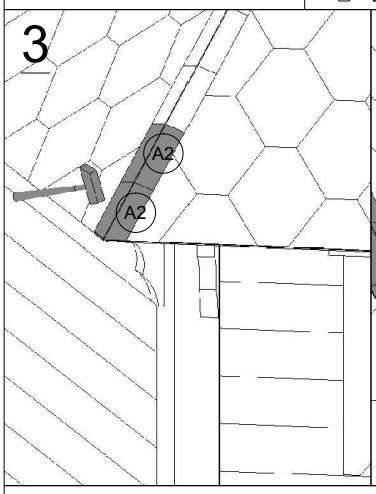


8

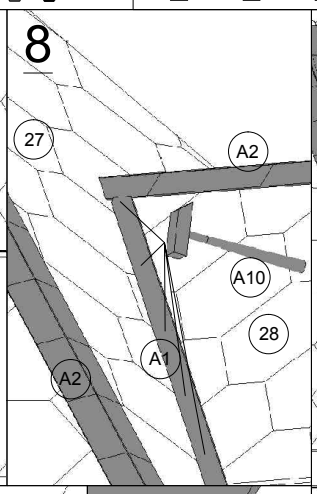


9

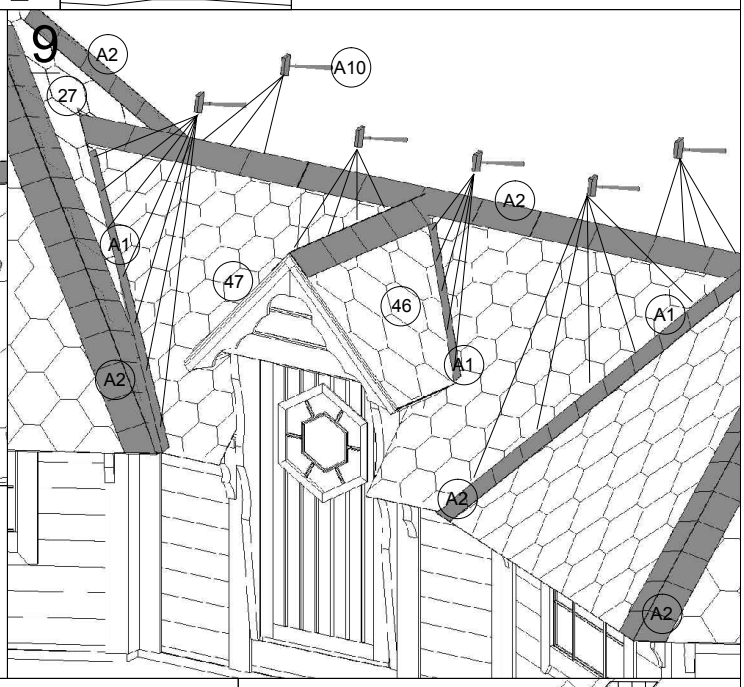


4

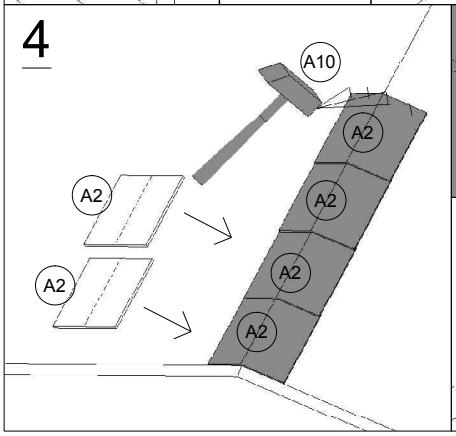


5

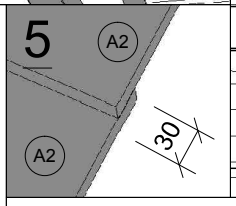


6

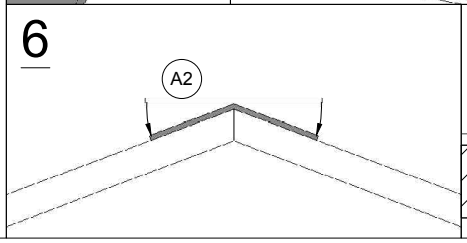


7

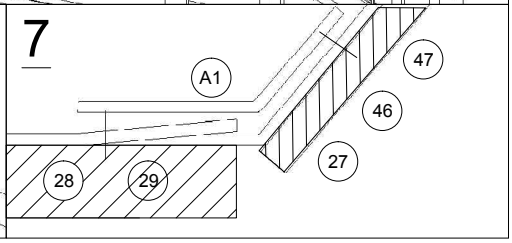

# 12. Grill cabin 9.2 with extension x 2

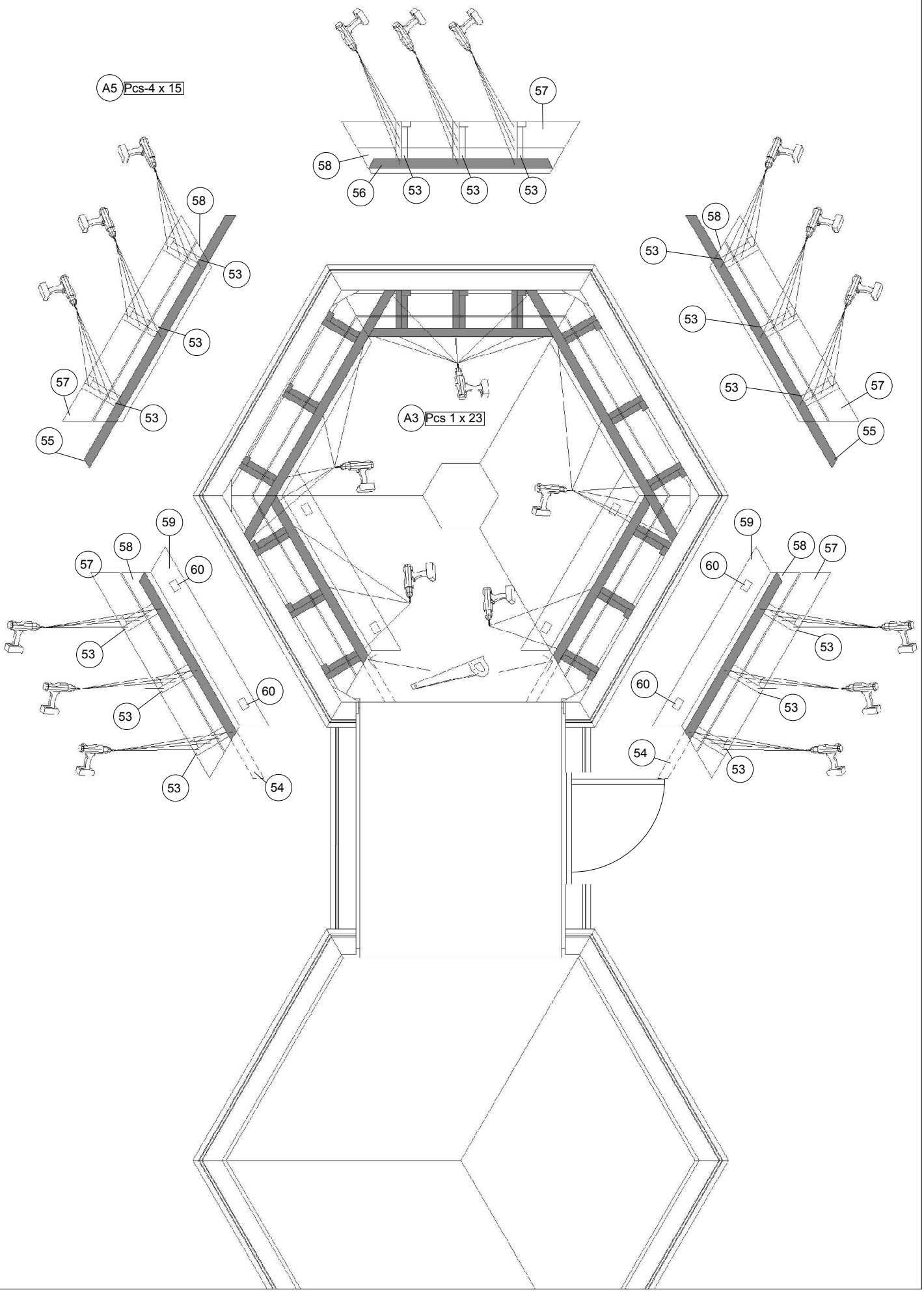

# 13. Grill cabin 9.2 with extension x 2

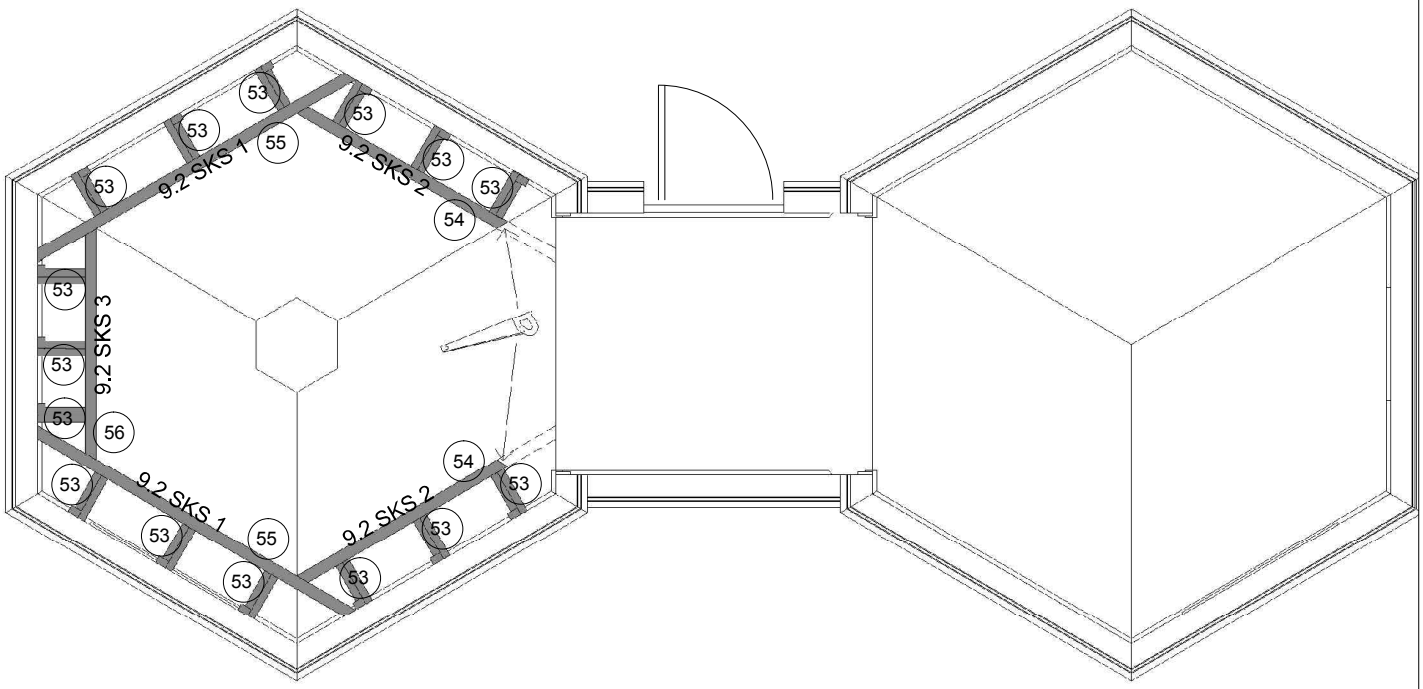


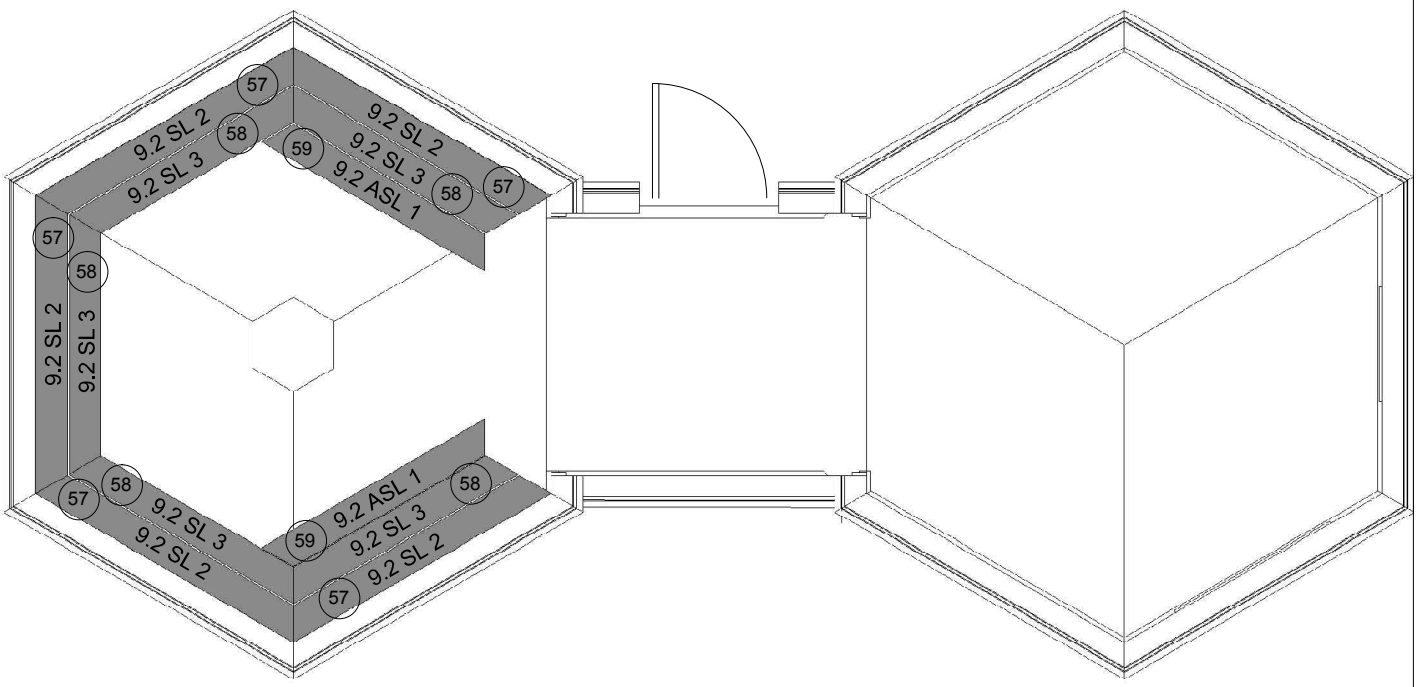

# 14. Grill cabin 9.2 with extension x 2

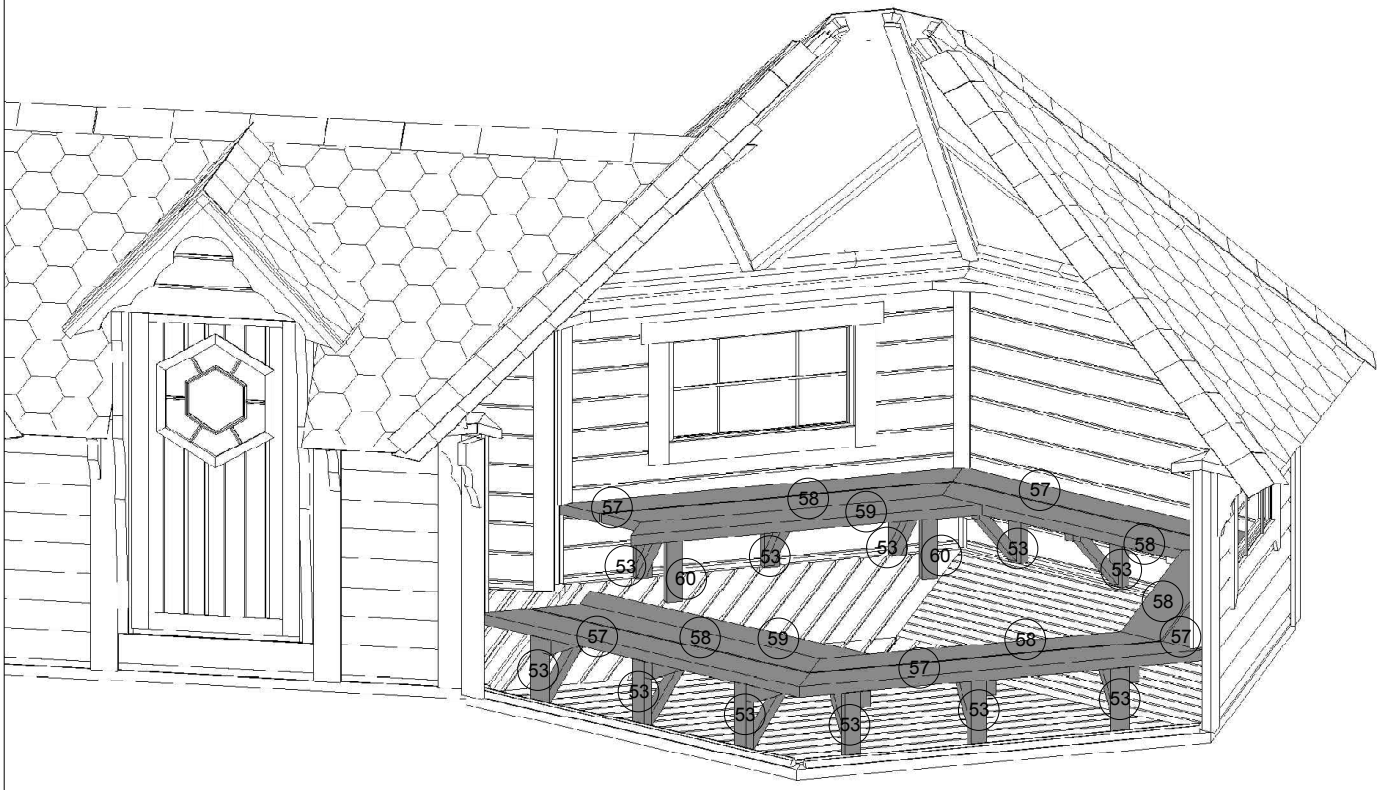


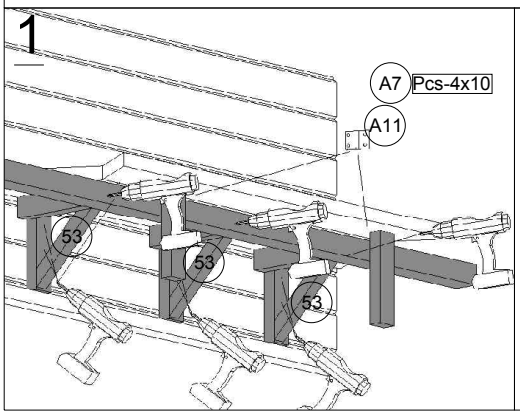


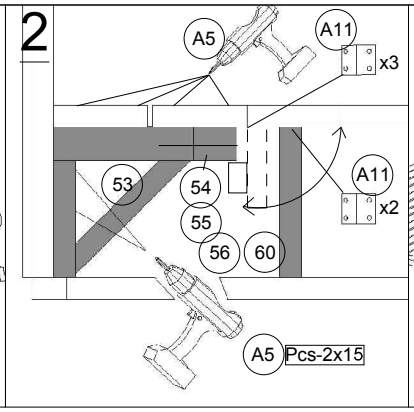


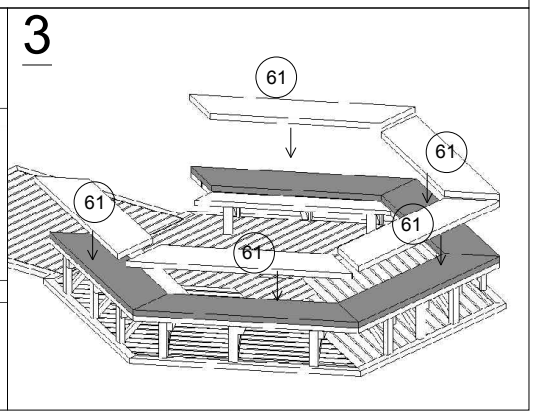

# 15. Grill cabin 9.2 with extension x 2

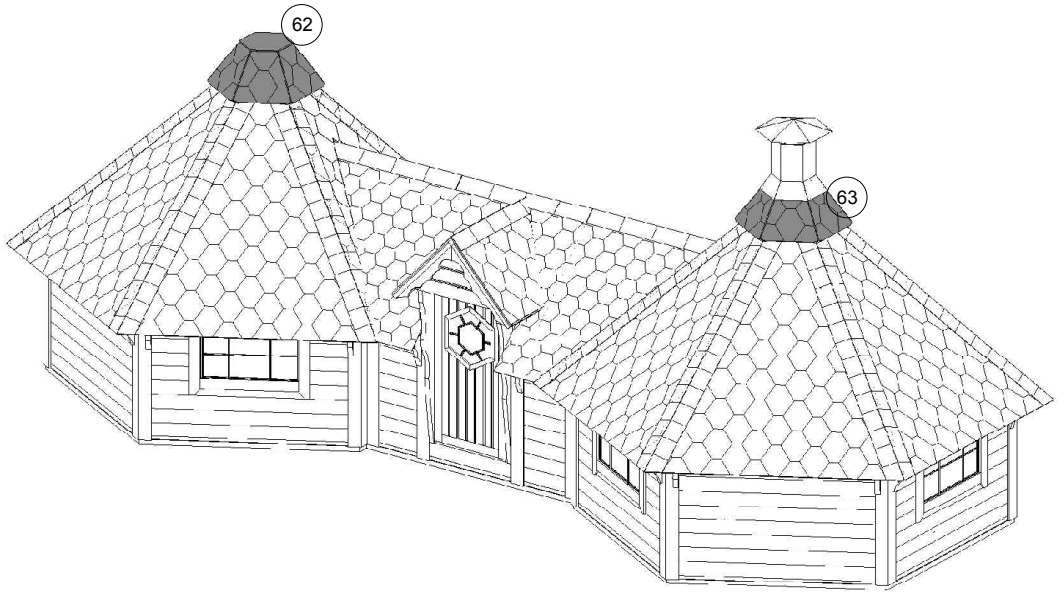


1

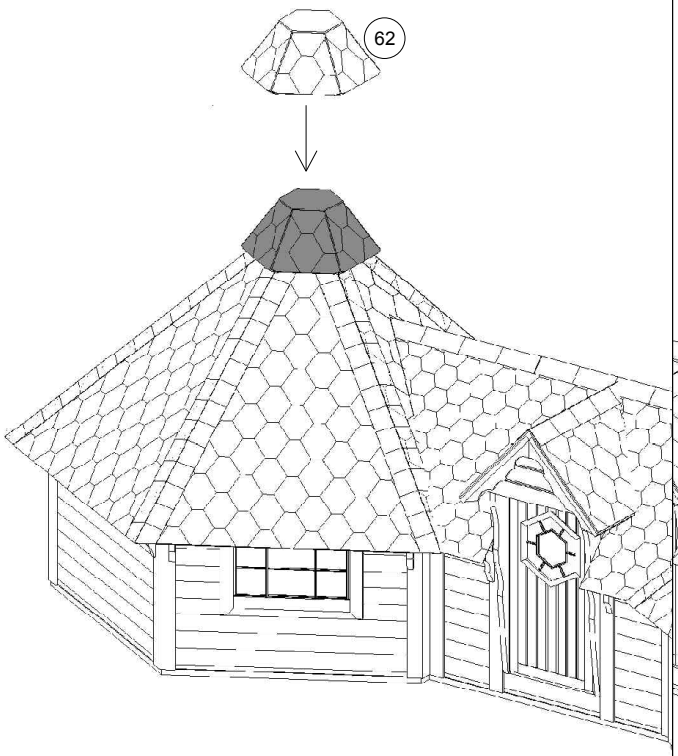

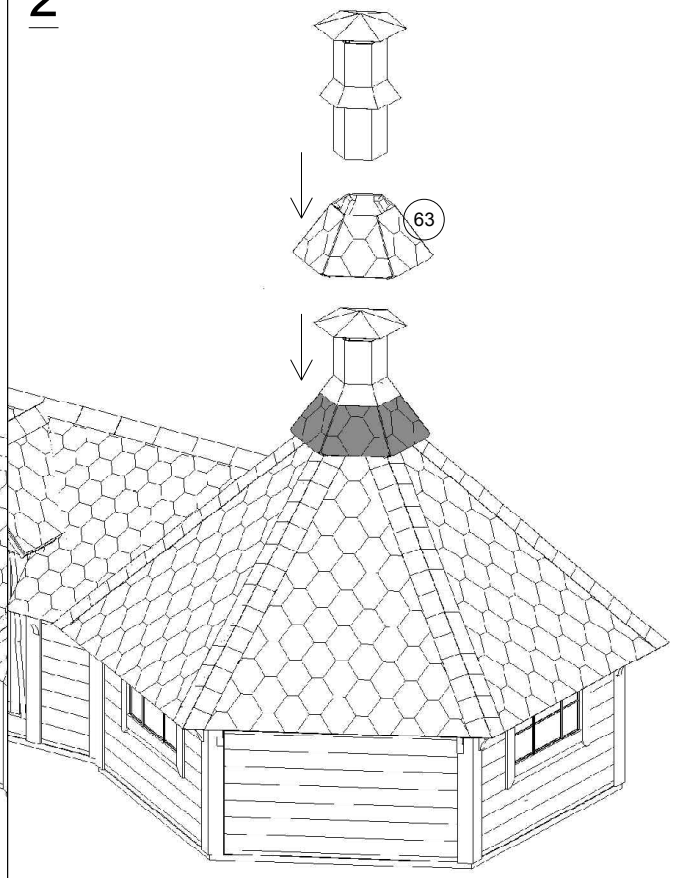
2